CITY OF
WINTERS
california
Est. 1875

Public Works Department

Improvement Standards and Standard Drawings
April 2016

REGISTERED PROFESSIONAL ENGINEER
NICHOLAS J. PONTICELLO
No. 49584
License Expires
9/30/2016
CIVIL
STATE OF CALIFORNIA

Nicholas Ponticello, PE
City Engineer

Copy of City Adopting Resolution

SECTION 1 PURPOSE AND DEFINITIONS 1-1
1-1 PURPOSE 1-1
1-2 STANDARDS UPDATE 1-1
1-3 REFERENCED STANDARDS 1-1
1-4 STANDARD FORMS 1-1
1-5 INTENDED USE 1-1
1-6 TECHNICAL SPECIFICATIONS 1-1
1-7 CONSTRUCTION CONTRACTOR 1-2
1-8 ADDENDA OR FUTURE UPDATES 1-2
1-9 OMISSIONS 1-2
1-10 DEFINITIONS 1-2

SECTION 2 GENERAL REQUIREMENTS 2-1
2-1 ENGINEER REQUIRED 2-1
2-2 PLANS REQUIRED 2-1
2-3 REFERENCE TO CITY SPECIFICATIONS 2-1
2-4 WORK IN PUBLIC RIGHTS OF WAY, EASEMENTS AND WATERWAYS 2-1
2-5 INITIAL PLAN SUBMITTAL REQUIREMENTS 2-1
2-6 IMPROVEMENT PLAN RESUBMITTAL 2-3
2-7 PLAN CHECK AND INSPECTION FEE 2-3
2-8 PLAN APPROVAL 2-3
2-9 APPROVED PLANS REQUIRED 2-4
2-10 IMPROVEMENT PLAN REVISIONS DURING CONSTRUCTION 2-4
2-11 RECORD PLANS 2-4
2-12 CONFLICTS, ERROR AND OMISSIONS 2-5
2-13 CHANGE IN CONSULTING ENGINEER 2-5
2-14 BORING AND JACKING SAFETY REQUIREMENTS 2-5
2-15 PHONE, GAS, ELECTRIC AND CABLE TV UTILITIES 2-5
2-16 PARTIAL PLANS 2-5
2-17 OTHER DEPARTMENT OR AGENCY NOTIFICATIONS 2-6
2-18 INSPECTION REQUIREMENTS 2-6
2-19 SPECIAL NOTICES AND PERMITS 2-6

SECTION 3 IMPROVEMENT PLAN REQUIREMENTS 3-1
3-1 DIGITAL SUBMITTALS 3-1
3-2 PAPER SIZE AND SCALE 3-1
3-3 DRAFTING STANDARD 3-1
3-4 TITLE SHEET 3-1
3-5 TITLE BLOCK 3-2
3-6 PLAN SET ORGANIZATION 3-2
3-7 PLAN DETAILS 3-3
3-8 REQUIRED NOTES 3-4
3-9 STANDARD DRAWINGS 3-4

SECTION 4 TRANSPORTATION IMPROVEMENTS 4-5
4-1 DEVELOPER'S PAVEMENT, SIGNAL, AND STREET LIGHT RESPONSIBILITY 4-5
4-2 COST PARTICIPATION 4-6
4-3 STREET TYPE AND DESIGN WIDTH 4-7
4-4 RIGHT-OF-WAY WIDTH 4-10
4-5 STRUCTURAL SECTION 4-10
4-6 PROFILE STANDARDS 4-11
4-7 PARTIAL STREET 4-12
4-8 OFFSET INTERSECTION 4-13
4-9 DRIVEWAYS 4-14
4-10 ELBOW INTERSECTION 4-15
4-11 CENTERLINE RADII 4-15
4-12 SIGHT DISTANCE AT INTERSECTIONS 4-15
4-13 INTERSECTION CORNER RADII 4-17
4-14 BUS STOP 4-17
4-15 SIDEWALK RAMP 4-17
4-16 CURB AND GUTTER 4-17
4-17 CROSS GUTTER 4-18
4-18 SIDEWALK 4-18
4-19 PEDESTRIAN LANE 4-18
4-20 REPLACING CULVERTS 4-19
4-21 TRENCHING IN EXISTING PAVED ROADWAYS 4-19
4-22 TESTING OF MATERIAL 4-19
4-23 STREET NAME 4-19
4-24 STREET SIGN LOCATION 4-20
4-25 TRAFFIC SIGNS 4-20
4-26 SURVEY MONUMENTS 4-20
4-27 PERMANENT BARRICADE 4-21
4-28 STREET TREES 4-21
4-29 FENCES 4-24
4-30 PRIVATELY OWNED BRIDGE 4-24
4-31 VEHICLE ACCESS AT STREET TERMINATIONS 4-24

SECTION 5 STREET LIGHT DESIGN 5-1
5-1 STREET LIGHTS REQUIRED 5-1
5-2 STREET LIGHTS ON PRIVATE ROADWAYS 5-1
5-3 DEVELOPER'S RESPONSIBILITY 5-1
5-4 UTILITY COMPANY AUTHORIZATION 5-1
5-5 GENERAL PLAN DETAILS 5-1
5-6 DESIGN STANDARDS 5-2
5-7 STREET LIGHT DESIGN DETAILS 5-3
5-8 MASTER PLANNING 5-5

SECTION 6 SOUND BARRIER DESIGN 6-1
6-1 LOCATION REQUIREMENTS 6-1
6-2 DESIGN 6-1
6-3 PLAN REQUIREMENTS 6-1

SECTION 7 SANITARY SEWER DESIGN 7-1
7-1 DESIGN CRITERIA 7-1
7-2 FLOW DETERMINATION 7-1
7-3 DESIGN FLOW CRITERIA 7-2
7-4 PIPE CAPACITY, SLOPE, VELOCITY, SIZE, DEPTH AND MATERIAL: 7-2
7-5 GROUNDWATER REQUIREMENTS 7-3
7-6 SEWER LOCATIONS AND ALIGNMENT REQUIREMENTS 7-3
7-7 TRENCH LOADING CONDITIONS AND PIPE DESIGN 7-4
7-8 MANHOLE CRITERIA 7-5
7-9 DROP CONNECTION CRITERIA 7-6
7-10 FLUSHING BRANCH CRITERIA 7-6
7-11 SERVICE SEWER DESIGN 7-6
7-12 CREEK CROSSING DESIGN 7-8
7-13 BORING AND JACKING REQUIREMENTS 7-8
7-14 PUMP STATION AND FORCE MAIN REQUIREMENTS 7-9
7-15 SEWER IMPROVEMENT PLAN REQUIREMENTS 7-9
7-16 DESIGN OF ON-SITE SEWER SYSTEMS FOR PRIVATE MULTIPLE OWNERSHIP RESIDENTIAL DEVELOPMENTS 7-11
7-17 MULTI-STRUCTURAL COMMERCIAL AND INDUSTRIAL DEVELOPMENTS 7-11
7-18 SEWER SYSTEM MASTER PLAN (SSMP) FOR A SPECIFIC AREA: 7-12

SECTION 8 WATER SYSTEMS DESIGN 8-1
8-1 INTRODUCTION 8-1
8-2 INTENT OF WATER SYSTEM IMPROVEMENT STANDARDS 8-1
8-3 DEFINITIONS 8-1
8-4 APPLICABLE STANDARDS 8-1
8-5 IMPROVEMENT PLAN SUBMITTAL 8-2
8-6 APPROVAL OF IMPROVEMENT PLANS 8-2
8-7 IMPROVEMENT PLAN REVISION 8-2
8-8 CONNECTION PERMITS AND FEES 8-2
8-9 WATER QUALITY 8-2
8-10 WATER PRESSURE 8-2
8-11 WATER DEMAND 8-3
8-12 FIRE FLOWS 8-3
8-13 WELLS, TREATMENT PLANT AND STORAGE FACILITY DESIGN 8-3
8-14 DISTRIBUTION MAIN DESIGN 8-3
8-15 WATER SYSTEM APPURTENANCES 8-6
8-16 RECYCLED WATER AND NON-POTABLE WATER TRANSMISSION MAINS AND DISTRIBUTION MAINS 8-8
8-17 RECORD PLANS 8-9

SECTION 9 STORM DRAINAGE DESIGN 9-1
9-1 AGENCY POLICY AND REQUIREMENTS 9-1
9-2 DEFINITIONS 9-1
9-3 FEDERAL FLOOD PROGRAM 9-2
9-4 LOW IMPACT DEVELOPMENT AND BEST MANAGEMENT PRACTICES 9-2
9-5 DRAINAGE DIVERSIONS 9-2
9-6 DRAINAGE EASEMENTS 9-2
9-7 DRAINAGE CAPACITY/DESIGN 9-3
9-8 DESIGN COMPUTATION 9-4
9-9 DESIGN RUNOFF 9-4
9-10 HYDRAULICS 9-4
9-11 CLOSED CONDUITS 9-11
9-12 MANHOLES 9-16
9-13 JUNCTION BOXES 9-17
9-14 INLETS 9-17
9-15 PIPE STUBS 9-19
9-16 HEADWALLS, WINGWALLS, ENDWALLS, TRASH RACKS, ACCESS CONTROL RACKS AND RAILINGS 9-19
9-17 DRAINAGE PUMPS 9-19
9-18 DETENTION SYSTEMS 9-20
9-19 OPEN CHANNELS 9-20
9-20 OUTFALL DESIGN 9-21
9-21 FENCING REQUIREMENTS 9-22
9-22 CROSS CULVERT CRITERIA 9-22

SECTION 10 GRADING REQUIREMENTS 10-1
10-1 GENERAL REQUIREMENTS 10-1
10-2 PLAN SHEET DETAILS 10-1
10-3 ROLLING TERRAIN GRADING 10-2
10-4 BOUNDARY GRADING 10-2
10-5 INTERIOR GRADING 10-2
10-6 RETAINING WALLS 10-3
10-7 GRADING AT TREES 10-4
10-8 CERTIFYING PAD ELEVATIONS 10-4
10-9 MAINTENANCE OF ACCESS TO UTILITY FACILITIES 10-5

SECTION 11 EROSION AND SEDIMENT CONTROL 11-1
11-1 DEFINITIONS 11-1
11-2 CONSTRUCTION PERMIT FOR STORM WATER RUNOFF 11-1
11-3 EROSION AND SEDIMENT CONTROL PLAN 11-1
11-4 REQUIRED BMPs 11-2
11-5 CONCRETE STAMP 11-2
11-6 CLEAN UP 11-2

SECTION 12 SUBDIVISION SURVEY MONUMENTS 12-1
12-1 SURVEY MONUMENT REQUIREMENTS: 12-1

BLANK PAGE

SECTION 1

PURPOSE AND DEFINITIONS

1-1 PURPOSE

These Improvement Standards provide standards to be applied to improvements and private works to be dedicated to the public and accepted by the Department for maintenance or operation, as well as improvements to be installed within existing rights of way and easements. This is necessary to provide for coordinated development of required facilities to be used by, and for the protection of, the public. These Standards shall serve to regulate and guide the design and preparation of plans for: construction of streets, highways, alleys, drainage, sewerage, street lighting, water supply facilities and related public improvements, and set guidelines for all private works which involve drainage, grading, erosion control, trees, and related improvements.

1-2 STANDARDS UPDATE

These updated standards replace any prior versions of design standards, standard specifications and/or forms previously issued. These design standards are developed from the Standard of the County of Sacramento and updated to meet the requirements of the City of Winters. The Standard Plans have been located at the end of the written portion of each section. Section numbering and drawing numbering have been changed.

1-3 REFERENCED STANDARDS

These standards reference the Caltrans Highway Design Manual, and Caltrans Traffic Manual, Sacramento County Standard Construction Specifications, as well as other common manuals and documents.

Almost all Caltrans documents can be downloaded from the Engineering Service Center web site at http://www.dot.ca.gov/hq/esc/oe/.

1-4 STANDARD FORMS

Standard forms are provided for reference and use by the Department staff, Consultants and Developers. Many of these forms will require editing based on project specific requirements.

1-5 INTENDED USE

The portions of these Design Standards, Standards Drawings, General/Administrative sections of the Standard Specifications, Standard forms, or other City document, that place a burden or responsibility on the City of Winters regarding a construction contract, are intended for the use of the City for construction contracts entered into by the City and a Contractor. Any use of these above named sections for any other use, by any other person, persons, or entity shall not create or imply the assumption of any liability or responsibility of the City of Winters.

1-6 TECHNICAL SPECIFICATIONS

The portions of the Design Standards, Construction Specification, Standard Plans, etc., that define the materials, work methods, quality and quantity for construction of any publicly maintained improvements shall apply to all construction contracts whether public or private. Public contracts include contracts

typically between the City of Winters and a construction contractor. Private contracts include contracts typically between a private party, such as a Developer, Land Owner, Home Owner, etc., and a construction contractor.

1-7 CONSTRUCTION CONTRACTOR

All contractors performing work on improvements to be reviewed and approved for acceptance and maintenance by the City of Winters, shall be constructed by Contractor(s) duly licensed and bonded in accordance with the laws of the State of California.

1-8 ADDENDA OR FUTURE UPDATES

Future Addenda or Updates to these Standards and related documents will be published on the City's website. It is the responsibility of affected parties to download and employ updates to the Standards once they are published.

1-9 OMISSIONS

Any items or situations not included in these Improvement Standards shall be designed in accordance with accepted engineering practice, City of Winters Standard Construction Specifications, Caltrans Standard Plans and Specifications for Construction of Local Streets and Roads (current edition), the Caltrans Highway Design Manual (current edition) and Caltrans Traffic Manual (current edition). Caltrans Manual of Uniform Traffic Control Devices (MUTCD), and as required by the City Engineer defined.

1-10 DEFINITIONS

When the following terms or titles are used in these standards or in any document or instrument where these standards govern, the intent and meaning shall be as herein defined:

ADA Accessibility Guidelines (ADAAG) – Shall mean the guidelines for Americans with Disability Act of 1990 for Public Right-of-Way and Shared Use Paths developed by the Federal Government.

Caltrans or State Standard Plans and Specifications – Shall mean the Standard Specifications and Drawings of the State of California, Department of Transportation. (Latest Edition).

City Engineer – Shall mean the City Engineer of the Winters acting either directly or through their authorized representatives, including but not limited to, other engineers, technicians, inspectors or administrative staff.

Consulting Engineer, Project Engineer or Design Engineer – Shall mean any person or persons, firm, partnerships or corporation legally authorized to practice civil, mechanical or electrical engineering in the State of California who prepares or submits improvements plan and specifications to the Department for approval. Includes engineers retained by private parties, the City of Winters or other public agencies.

Department – When used in reference specifications or this document, shall mean the City Engineer.

Developer – Shall mean any person or persons, firms, partnership, corporation or, combination thereof, financially responsible for the work involved in subdividing, improving and offering lots for sale.

Development – Shall mean the act, process, or result of any land grading, utility installation, street or building construction on property.

Digital Submittals or Electronic Files – Shall mean data files prepared using appropriate software saved and transmitted in their native format for city use and records.

Director – When used in reference specifications shall mean the City Engineer.

Governing Board or Legislative Body – Shall mean the City Council of the City of Winters.

Laboratory – Shall mean any testing agency or testing firm which has been approved by the City Engineer.

Mitigation Monitoring and Reporting Program (MMRP) - An environmental mitigation program administered by the Community Development Department in accordance with City Code.

Public Works Department – Shall mean the Department of Public Works of the City of Winters. Although the City Engineer reviews and approves Plans for public improvements, this Department is responsible for the operation and maintenance of any public improvements.

Standard Construction Specifications – Shall mean the 2014 City of Winters Construction Specification and the 2008 County of Sacramento Standard Construction Specifications Section 11 thru 50 with modification to the County Specification promulgated in Section 12 of the Winters Specifications.

Standard Drawings – Shall mean the standard drawings as set forth in these Design Standards and the Standard Construction Specifications.

State or Caltrans – When used in the various Standard Specifications, shall mean City of Winters.

Urban Area – Shall mean any area planned for urban development by the appropriate General Plan.

BLANK PAGE

SECTION 2

GENERAL REQUIREMENTS

2-1 ENGINEER REQUIRED

All plans and specifications for improvements which are to be accepted for maintenance by the Department, including private on-site drainage and grading, shall be prepared by an engineer of the appropriate branch of engineering covering the work submitted. All design work, whether publicly or privately sponsored, shall be performed in accordance with these standards and in accordance with the standard of practice for the particular profession.

2-2 PLANS REQUIRED

Complete plans for all proposed streets, bikeways, grading, erosion control, drainage facilities, sewerage, street lighting, water distribution systems and any other improvement required by the project approvals, including any necessary design calculations, reports, dedications, and easements, shall be submitted to the Department, for approval. Copies of rights-of-entry obtained from adjacent properties shall be provided to the Department. All Improvement Plans shall be prepared on standard 24"x36" size sheets.

2-3 REFERENCE TO CITY SPECIFICATIONS

The General Notes of all plans shall include the following note:

> All construction and materials shall comply with the latest edition of the City of Winters Standard Construction Specifications. Reference shall be made to the 2008 County of Sacramento Standard Construction Specifications Sections 11 thru 50.

The design engineer shall be responsible for providing specific references on the plans to other standard specifications for construction features that are not included in these standards or the City of Winter Standard Construction Specifications.

2-4 WORK IN PUBLIC RIGHTS OF WAY, EASEMENTS AND WATERWAYS

The following shall govern work done within Public rights-of-ways, easements, and waterways:

A. Possession of a complete set of Department-approved improvement plans shall allow a contractor duly licensed by the State of California to perform work specified on the plans in Public rights of way, easements and waterways

B. Possession of a valid encroachment permit issued in accordance with Department Encroachment Permit policy, as adopted by the Governing Board, will allow a contractor duly licensed by the State of California to perform work specified in the permit in Public rights of way.

2-5 INITIAL PLAN SUBMITTAL REQUIREMENTS

The initial submittal of improvement plans shall be made to the Department. The submittal shall consist of the following:

A. Payment of Plan Check Fee.

B. Four sets of plans, complete and in accordance with these Improvement Standards and the Standard Construction Specifications, along with any project specifications, computation, test data, and other material requested by the City Engineer.

C. Supporting design reports, calculations and plans:

1. Hydrology and Hydraulics calculations and reports for Storm Runoff, including Shed Map.
2. Sewer System Calculations and shed map.
3. Water System Network Analysis and maps.
4. Geotechnical Report containing recommendations for earth grading and compaction, road structural design based on R-value tests, boring logs, soil corrosivity, ground water, etc., as required to meet project needs and conditions.
5. Street Lighting System Design for any city owned lights.

D. Cost estimate for Improvement Security purposes to be submitted, reviewed and approved prior to recordation of a Parcel or Final Map.

E. Related Final or Parcel Map submittal to be processed concurrently.

F. One copy of the final Development Conditions of Approval, including Tentative Map, and CEQA mitigations (if any) for all rezones, subdivision approvals, variances, use permits, including related maps and plans, and any other discretionary planning actions for the subject site and development.

G. A portion of the plan check and inspection fee in accordance with Section 2-7.

H. The names, addresses and telephone numbers of the developer and the design engineer.

I. Utility letters in accordance with Section 2-15.

J. Joint Trench Plans must be submitted prior to approval of Improvement Plans and/or recordation of a related Map. Note that in accordance with City Ordinance, all new and existing utilities must be placed underground.

K. Copies of permits as required by other agencies.

L. Digital files as requested during plan review process. Digital files for all plans, maps, and other supporting documents required prior to final approval.

Additional copies of any submitted items shall be provided as requested by the City Engineer. Additional copies may also be required to be sent directly to other reviewing parties or agencies.

Should there be required alterations or revisions to the plans as submitted; the City Engineer will return one copy with the corrections marked or indicated thereon, including comments on supporting documentation and/or a written list of other re-submittal requirements. If the plans submitted are not prepared in accordance with these Improvement Standards or are not in keeping with the standards of the profession, the City Engineer may return them unmarked and unapproved.

Where the Improvement Plans submitted cover only a portion of ultimate development, the Plans submitted must be accompanied by the approved Tentative Master Plan (or Study Plan if there is no approved Tentative Plan) showing topographic features of the ultimate development at an adequate scale to clearly show all future improvements.

Items subject to the jurisdiction of other agencies shall be approved by the appropriate official of that Department prior to obtaining approval of the City Engineer. The responsibility of obtaining such prior approval shall rest with the Developer. The Plans shall include a signature box on the Title Sheet for indication of such approval.

2-6 IMPROVEMENT PLAN RESUBMITTAL

The City Engineer shall indicate the re-submittal requirements. Unless stated otherwise, at least 4 sets of plans and 2 copies of letter sized documents and/or reports shall be provided. The Consulting Engineer shall notify the City Engineer if plans being resubmitted contain revisions or alterations other than those required by the City Engineer on previously submitted plans. Revision notations shall not be shown on plans until after the City Engineer has formally approved plans.

2-7 PLAN CHECK AND INSPECTION FEE

When improvement plans are initially submitted to the Department for checking, a portion of the total plan check and inspection fee will be required as a deposit. The minimum deposit shall be 2% of the value of the constructed improvements, unless superseded by an amount established by City Fee Resolution.

Should the development not be carried to completion, any portion of the required deposit over and above the accumulated costs expended by the Department on the development will be refunded to the developer. Failure of a developer to complete a project does not relieve the developer of paying all costs incurred with the Department.

The Developer is responsible for notifying the Department of any change of billing address, ownership or design consultants.

2-8 PLAN APPROVAL

No plans will be approved nor construction authorized until the City approves a set of plans. Assuming that a Final Map or Parcel Map is approved concurrently with the Improvement Plans; the process will generally consist of the following:

A. Final Map, Improvement Plans and supporting documentation is submitted concurrently and reviewed by the City Engineer.

B. Comments are returned to the Developer and respective consultants preparing the Maps and Plans.

C. Corrected Maps, Plans and supporting documents are re-submitted to the City. This step and the previous one are repeated until the Maps and Plans satisfactorily meet City requirements.

D. The City prepares the Subdivision Improvement Agreement for review by the Developer. Developer returns comments and City revises as appropriate.

E. Developer's Consultants deliver original Plans and Maps to City for approval. Developer delivers executed Agreement, including required items, such as, but not limited to, securities, insurance certificates, fees, deeds, etc. Evidence of arrangements to install utilities as required by Section 2-15 shall be provided with the approved plans delivered to the City Engineer.

F. City Engineer signs the Plans and Maps and schedules the Plans, Maps and Agreement for Council action. Note that at least 2 weeks lead time is required for this step.

G. City executes the Agreement and City records Maps.

H. Signed Plans are released to Developer's Consultants.

I. Developer's Consultants return the requested sets of Plans, including duplicate originals if needed, for City's use during construction.

J. Developer schedules pre-construction meeting between City Engineer, other city staff, other Agency staff, Developer's Contractor, Consultants and other appropriate personnel representing the Developer during construction.

K. Developer and City agree to periodic meeting schedule to discuss and resolve any issues arising during construction.

Revisions, corrections or additions shall be resubmitted to the City Engineer for approval as prescribed in Section 2-10. At such time as the Consulting Engineer preparing the plans has made the necessary revisions, and signed and stamped the original plans, and fees have been paid, the City Engineer will sign the plans in the space provided. The City Engineer's approval is valid for a period of twelve months. Should work not commence within the 12-month period, the plans shall be resubmitted for re-approval.

The City Engineer shall have the authority to order any Contractor to cease work on any project if said Contractor does not have properly approved plans in his possession.

2-9 APPROVED PLANS REQUIRED

Subdivision - Five complete sets of plans.

Other Developments - Five complete sets of plans.

Additional copies of improvements plans may be required by the City Engineer, and these shall be furnished to the Department without cost.

2-10 IMPROVEMENT PLAN REVISIONS DURING CONSTRUCTION

Should changes become necessary during construction, the Consulting Engineer shall first obtain the consent of the City Engineer and shall then resubmit the title sheet and the plan sheets affected for review and approval. The changes on the plans shall be made in the following manner:

A. The original proposal shall not be eradicated from the plans but shall be lined out.

B. In the event that eradicating the original proposal is necessary to maintain clarity of the plans, approval must first be obtained from the City Engineer.

C. The changes shall be clearly shown on the plans with the changes and approval noted on the revision signature block, conforming to Standard Drawing 3-l.

D. The changes shall be identified by the revision number in a triangle delineated on the plans adjacent to the change and on the revision signature block.

Minor changes that do not affect the basic design or contract may be made upon the authorization of the City Engineer, but said changes must be shown on record plans when the contract is completed.

The City Engineer may specify changes in the plans in order to complete the necessary facilities, to be agreed by the consultant. Changes in the plans ordered by the City Engineer shall conform to all of the above.

2-11 RECORD PLANS

The Developer shall be responsible for keeping an accurate record of all approved deviations from the plans and shall provide one copy of these records to the City Engineer upon completion of the work before final acceptance of the completed improvements. The copy submitted to the Department shall be on standard 24"x36" mylar sheets (matte).

Changes in the Plans noted during the construction phase shall be edited such that lined-out or deleted portions of the design are removed from the Record Plans. Design additions or new information shall be fully incorporated into the Record Plans. Linework and notations that specifically highlight or identify design changes during construction shall be also be deleted from the Record Plans.

Certification by the Consulting Engineer of the finished pad elevations of subdivision lots shall be required prior to final acceptance of the subdivision improvements. Certification shall comply with Section 10-8.

2-12 CONFLICTS, ERROR AND OMISSIONS

Excepted from approval are any features of the plans that are contrary to, in conflict with, or do not conform to any California State Law, City Code or Resolution, conditions of approval, or generally accepted good engineering practice, in keeping with the standards of the professions, even though such errors, omissions or conflicts may have been overlooked in the Department's review of the plans.

2-13 CHANGE IN CONSULTING ENGINEER

If the developer elects to have a registered civil engineer or licensed land surveyor, other than the design engineer, provide the construction staking, then notice shall be provided to the City Engineer in writing with the name of the individual or firm one week prior to the staking of the project for construction. The Developer shall then be responsible for:

- verifying all construction
- the preparation of revised plans for construction changes
- the preparation of Record Plans upon completion of the construction.

In the Developer's notification of a change in the firm providing construction staking, he shall acknowledge that he accepts responsibility for design changes and "as built" information as noted above.

2-14 BORING AND JACKING SAFETY REQUIREMENTS

Any boring or jacking operation involving an opening greater than 30 inches in diameter is subject to the State of California Division of Industrial Safety's tunnel safety requirements. The Consulting Engineer shall submit to the State Division of Industrial Safety plans and specifications applicable to the tunnel operation, with a letter requesting tunnel classification, prior to bidding the project. This procedure is also recommended to avoid project delay if there is the possibility of any personnel entering the tunnel, regardless of diameter and length. The letter should identify the Department responsible for the project, and the Department's mailing address. The plans shall identify underground utilities and tanks or areas for storing fuel and toxic gases in the vicinity of the tunnel site, and a description of the historical land use in the area. The request for classification should be submitted allowing ample time for the Division of Industrial Safety review in order that any special requirements can be included in the project plans and specifications. The Consulting Engineer shall also attend the required pre-construction meeting.

2-15 PHONE, GAS, ELECTRIC AND CABLE TV UTILITIES

All existing utilities are to be shown on the plans. The Consulting Engineer shall submit prints of the preliminary and approved plans to the utility companies involved (such as, but not limited to, Phone company, Electric & Gas provider, Cable TV provider, etc.). Copies of the transmittal letters to the utility companies shall be provided to the City Engineer early in the Plan review process.

The Developer shall make necessary arrangements with the serving utilities to properly plan for any relocation of existing utilities and for the required expansion to serve the development. Such arrangements shall be finalized prior to approval of any Maps and Plans.

The following note shall appear on the first page of the plans:

"No pavement work will occur within the road right-of-way prior to completion of any necessary utility pole relocation within that right-of-way."

2-16 PARTIAL PLANS

Where the improvement plans submitted cover only a portion of ultimate development, the plans submitted shall be accompanied by the approved tentative plan or study plan of the ultimate development.

2-17 OTHER DEPARTMENT OR AGENCY NOTIFICATIONS

Prior to Department approval, the Developer (or Consulting Engineer acting as the Developer's representative) is responsible for obtaining the approval and necessary permits of other governmental or municipal agencies when their facilities are involved.

2-18 INSPECTION REQUIREMENTS

Any improvement which will ultimately be maintained by the Department shall be inspected during construction by the City Engineer. Each phase of construction shall be inspected and approved prior to proceeding to subsequent phases.

The City Engineer shall inspect all improvements including grading during construction.

Any improvement constructed without inspection as provided above or constructed contrary to the order or instruction of the City Engineer will be deemed as not complying with Standard Construction Specifications or these Improvement Standards may not be accepted by the Department for maintenance purposes.

The Consulting Engineer shall notify the City Engineer when the Contractor first calls for grades and staking and shall provide the City Engineer with a copy of all cut sheets.

The process for final acceptance will generally be as follows:

A. The City Engineer shall inspect the work throughout the entire construction period. When in the opinion of the City Engineer, the work is substantially complete; a Punch List of corrective work items shall be prepared and distributed to the Contractor and Developer. The Punch List may be periodically updated as corrective work progresses.

B. Upon satisfactory correction of all Punch List items, the Contractor shall request a Final Inspection.

C. The City Engineer and other involved Agencies shall perform the Final Inspection, and if all work is deemed complete, the City Engineer will recommend acceptance to the City Council.

D. Upon acceptance of the work by the City Council, and within five (5) working days thereafter, the City shall prepare and file a Notice of Completion with the Yolo County Recorder. The date the Notice is recorded will commence a thirty-five (35) day lien period during which liens may be filed against the project.

E. The Faithful Performance Bond will be released by the City upon acceptance of the work by the City Council. Except as required to satisfy any liens, the Labor and Materials Bond will be released sixty-five (65) days after acceptance of the work. The Warranty Bond (Certificate of Guaranty) will be held for a period of one (1) year after acceptance of the work.

For assessment districts and projects where the Department participates in the costs thereof, final quantities will be measured in the presence of the City Engineer, Consulting Engineer, and Contractor.

2-19 SPECIAL NOTICES AND PERMITS

The Consulting Engineer shall place notes on the Plans to advise the Contractor as follows:

A. Contractors shall be in receipt of official Department approved plans prior to construction.

B. Contractor shall notify all utility companies involved in the development prior to beginning of work.

C. Contractor shall notify "Underground Service Alert" two working days in advance before of any excavation.

D. Contractor shall be responsible for the protection of all existing monuments and/or other survey monuments and shall notify Department Surveyor of any damaged or removed City, State, or Bureau monuments.

E. Contractor shall be responsible for conducting his operation entirely outside of any floodplain boundaries unless otherwise approved. The 100-year floodplain boundaries shall be clearly delineated in the field prior to construction.

F. Contractor shall be responsible for conducting his operation entirely outside of any no grading area. These areas shall be clearly delineated in the field prior to construction.

G. Where work is being done in an off-site easement the Contractor shall notify the property owner two working days prior to commencing work. Copies of all signed/approved off-site easement and/or right-of-entry documents shall be provided to the city.

H. Contractor shall not dispose of chlorinated water into any drainage system.

BLANK PAGE

SECTION 3

IMPROVEMENT PLAN REQUIREMENTS

3-1 DIGITAL SUBMITTALS

All plans shall be prepared using appropriate computer based design and drafting software. Improvement Plans shall be prepared using AutoCAD (2010 or later). Digital files of Plans and supporting documentation shall be submitted to the agency for their records prior to approval of Improvement Plans and related Maps.

Digital submittals may be made via current media format or via e-mail, as required by the City Engineer. Digital plan submittals shall include all that is required in section 2-5 of these standards. Plans shall conform to the current County of Yolo county-wide system (GIS) and computer-aided drafting (CAD) standards.

Supporting files and documents shall also mean, word documents, spreadsheets, data base, text or other formats as appropriate, provided that they are saved and transmitted in a fully functional format that is capable of being opened and translated by any current Microsoft software program, such as, but not limited to, recent versions of Word, Excel, Access, etc. Specialized software files, such as HEC, shall be transmitted in their native format including any ancillary supporting files. Files prepared and submitted in a proprietary format which cannot be opened, translated and used in the above software formats are not acceptable.

3-2 PAPER SIZE AND SCALE

All improvement plans shall be submitted on 24" by 36" paper. Only common engineering scales shall be used.

3-3 DRAFTING STANDARD

All plans approved by the Agency may be scanned and stored in a document management system. Therefore, all line work must be clear, sharp and of appropriate weight. Letters and numerals must be 0.12-inch minimum height, well formed and sharp. Line work shall not intersect numerals showing profile elevations. Sharp solid arrowheads shall terminate dimension lines.

3-4 TITLE SHEET

All improvement plans shall have the following information as a minimum on the cover sheet:

1. The entire subdivision or parcel and project (may be combined with the Overall Project Site Map).
2. Assessment district limits (if applicable)
3. City limits (if applicable)
4. Street Names and Widths
5. Adjacent subdivision or parcel references, including names, lot lines and lot numbers
6. Property lines
7. Public easements
8. Location and Vicinity Maps

9. Scale of drawings, including scale bar
10. Index of sheets
11. Legend of symbols
12. Signature and revision blocks conforming to Standard Drawing 3-l
13. Benchmark information
14. Overall Project Site Map (with graphical sheet limits) showing all improvements.

3-5 TITLE BLOCK

Each sheet within the set of drawings shall have an approved title block showing the following:

1. Sheet title
2. Sheet number
3. Date
4. Scale
5. Consulting Engineer's name, signature and seal. Signature may be placed across the seal.
6. Project title

The title block shall be placed across the bottom edge of each plan sheet.

3-6 PLAN SET ORGANIZATION

The order of the drawings in the Plan Set shall generally be organized as follows:

1. Title Sheet
2. General Notes (with Typical Sections if space allows)
3. Street Surface Plan and Profile – surface improvements only
4. Street Underground Plan and Profile – underground improvements only
5. Street Lighting and Traffic Striping and Signs Plan
6. Grading Plan
7. Details

Separate plan and profile sheets shall be used for surface improvements and underground improvements. The sheet layouts or match points between sheets match for the surface and underground improvements for each street. The FL of each gutter and CL of street shall be shown on the street profile. The profile of all utilities shall be shown on the underground sheets. All laterals crossing the street at approximate right angles to the centerline shall be individually profiled. Any underground utility not within the limits of a proposed street, shall be shown on a separate plan and profile sheet.

Other specialties, such as landscaping, structural, electrical, mechanical, etc., shall be included in the plan set as appropriate.

The Fire Department shall approve plans showing the domestic water system improvements. The signature block shall conform to Standard Drawing 3-l and shall be situated near the lower right hand corner of the first sheet of the plans.

3-7 PLAN DETAILS

In addition to the other requirements of these Improvement Standards, the following details shall be shown on the plans submitted for approval. The Consulting Engineer is responsible for preparing neat, accurate and comprehensive plans in keeping with the standards of the profession.

A. **Record Information.** All existing and proposed:

1. Right of Way lines
2. Boundaries of lots fronting on the street (addresses of existing lots)
3. Easements
4. On-site and off-site right of way and easement lines shall be properly dimensioned.

B. **Existing Facilities.** All pertinent existing facilities shall be shown, including:

1. Street striping
2. Medians
3. Driveways (on both sides of the street when within 40 feet of the median ending)
4. Curbs
5. Sidewalks
6. Pavement shoulders
7. Location and size of all underground utilities, water, storm, and sanitary sewer lines,
8. Limits of 100-year flood plains
9. Structures
10. Trees (6" and larger) and other foliage
11. Traffic signals and traffic detector loops
12. Street lights, pullboxes, and underground electrical conduits
13. Drainage ditches
14. Utility poles
15. Fire hydrants
16. Retaining walls
17. Other features of the area which may affect the design requirements for the project.
18. When a potential utility conflict exists, the Consulting Engineer shall verify "as built" elevations for the utilities, using sub-surface investigative techniques, whether electronic or physical (excavation). For existing structural sections, the grade of the cross slope on the road and 20 feet into the property at driveways shall be shown.

C. **Contours and Elevations**. Existing contours and supporting spot elevations shall be shown on all plans. Topographic information of existing facilities shall be extended an appropriate distance beyond the project limits for conform purposes. In general, the limits for drainage and grading purposes shall extend at least 100 feet beyond the project limits. The limits for street striping and transportation conform shall extend at least 300 feet and further as directed by the City Engineer.

D. **Profile.** The plans shall show the existing profile of all roadway centerline, edges of pavement, gutter flow lines, drainage ditches, storm and sanitary sewers. Designs of proposed public improvements shall include profiles showing centerline elevations at 50-foot intervals and rates of grades, vertical curves and other vertical alignment data. When curbs and gutters are designed for reconstructed roads, elevations shall be shown on the edge of the outside traveled way, or if the road has a full paved section, shall also be shown two feet from the proposed lip of gutter. Designs for vertical curves shall show elevations at 25-foot intervals. Where it exists, stationing shall be used for profiles of public roads.

   The plans shall show the existing ground profile for a minimum distance of 200 feet beyond temporary street endings to insure proper vertical alignment within the proposed improvement limits. The 200-foot minimum shall be increased when requested by the City Engineer.

E. **Stationing and Orientation**. The stationing on plan and profile shall read from left to right. Stationing shall increase from south to north or from west to east, except for cul-de-sacs, where stationing shall proceed from the intersection. Plans shall be so arranged that the North arrow points toward the top or upper 180 degrees, insofar as practical.

F. **Bench Marks**. Location, description, and elevation of benchmarks and datum shall be clearly delineated on the plans. The datum shall be North American Vertical Datum of 1988 (NAVD88). The Consulting Engineer or Land Surveyor shall contact the Public Works Department or USGS for location and elevation of the official benchmark nearest their project.

G. **California Coordinates System**. Proposed improvements shall be tied into the California Coordinate System, consistent with mapping requirements for any required Parcel or Final Map. If monument coordinate points are not available within a reasonable distance (1/2 mile or less) of said improvement special consideration may be given by the City Engineer.

H. **Cross-Sections.** Cross sections shall be included in the plans where determined necessary by the City Engineer. Sections shall include all pertinent structural and topographical features. Section calls shall be identified by a number and letter and the sheet on which the section appears.

I. **Special Notes**. Special Notes shall be clearly indicated. Notes shall contain a statement regarding obtaining encroachment permits from other agencies when applicable.

3-8 REQUIRED NOTES

A list of Department required notes may be obtained from the Public Works Department and shall be included on all improvement plans submitted to the Department for approval.

3-9 STANDARD DRAWINGS

Consulting engineers shall not include the standard drawings on improvement plans, but shall refer to the drawing by number. If a variance to a standard drawing is intended, the drawing shall be shown with the variance noted.

IMPROVEMENT PLAN APPROVAL BLOCK

City of Winters PUBLIC WORKS DEPARTMENT	
(PUT PROJECT NAME HERE)	
Parcel No.:	
Map Coordinates:	
Approved:	
Facility Code:	Drainage Fee:
Checked By:	

IMPROVEMENT PLAN REVISION BLOCK

No.	Description	Engr Init	CITY APPROVAL	
			By	Date

1" MIN. .5" MIN.

1. Project name, parcel number, and map coordinates shall be in 10 point Arial font
2. Approval block shall be located at the lower right corner of title sheet, within bottom 6 inches, and right 8 inches of page

Put revision block on title sheet, and on all sheets which include revisions

CITY ENGINEER APPROVAL BLOCK

Approved By:	
CITY OF WINTERS CITY ENGINEER	Date

FIRE DISTRICT APPROVAL BLOCK

Approved By:	
(PUT NAME OF FIRE DISTRICT HERE)	Date

Put water and fire approval blocks on water distribution plans for subdivisions, and on the title sheet for all other projects

City of Winters *PUBLIC WORKS DEPARTMENT*	DATE: DEC 2015
SIGNATURE BLOCKS	SHEET # 1 OF 1
CITY ENGINEER APPROVED Nicholas J. Ponticello P.E. NO. 49584	DRAWING #: 3-1

SECTION 4

TRANSPORTATION IMPROVEMENTS

4-1 DEVELOPER'S PAVEMENT, SIGNAL, AND STREET LIGHT RESPONSIBILITY

A. Construction of street improvements shall conform to the centerline established by the City Engineer.

B. Where the existing pavement section does not generally meet the current structural section standard and/or the centerline grade and alignment or existing pavement conditions are not satisfactory to the City Engineer, the Developer shall be responsible for the pavement section to the centerline on all streets within, adjacent, and contiguous to the Developer's project.

The Developer shall overlay any areas beyond the centerline where the design centerline grade deviates from the existing or where adjacent pavement conditions are not satisfactory to the City Engineer. The Developer shall also be responsible for overlaying any low areas where the new pavement meets the existing pavement to maintain a uniform cross slope.

C. When making a connection to an existing street end, the Developer shall be responsible for removing and reconstructing up to a maximum of twenty feet of the existing roadway to make a satisfactory connection as required by the City Engineer.

When making connections to existing pavement, the Developer shall be responsible for a 1-foot minimum sawcut of the existing pavement along with an additional 1 foot by 1-1/2" deep grinding and paving. Refer to Standard Drawing 4-21. When making connections to existing new pavement (within 3 years of resurfacing), the 1-1/2" deep grinding shall extend to the lip of gutter, lane line, or center of traffic lane as required by the City Engineer.

D. The Developer shall be responsible for all of the structural section and pavement on all streets within, adjacent, and contiguous to the project, including frontage roads, as required by the City Engineer. If the street is to be paved under a future Department contract, the City Engineer may require a cash deposit for the roadway and related work in lieu of actual construction and the Department will include the work in the Department contract.

E. All temporary approaches to existing roadways required as a result of the development shall be at the Developer's expense. The temporary approaches shall be paved with a structural section to be determined individually for each situation.

F. The Developer shall be responsible for relocating existing traffic signals and street lights, and installing new traffic signals and street lights as necessary for new street and driveway locations. The Developer shall also be responsible for relocating existing traffic signals, street lights and other existing utilities as necessary for the installation of new curbs or new curbs and sidewalks at locations where there are no existing curbs or curbs and sidewalks.

G. The Developer shall be responsible for constructing or modifying curbed median islands where required by these standards, including landscaping, or when required for traffic control as a result of the development, as determined by the City Engineer.

H. The developer shall be responsible for bus stops, bus turnouts, and intersection widening as shown on Standard Drawing 4-18 and in accordance with Section 4-14 of these Standards.

I. Variances and exceptions to these standards shall be specifically listed and requested in writing. Such requests shall be presented along with substantiating evidence (plans, profiles, calculations, etc.) supporting the variance or exception. The request shall be made as early as possible in the review process and preferably prior to or concurrently with the first submittal.

J. The Developer shall be responsible for all drainage facilities (bridges, pipes, culverts, and appurtenances) crossing new streets within, adjacent, and contiguous to the project.

K. The Developer shall be responsible for all on-site modifications to allow for access for the disabled, including but not limited to: guidestrips, sidewalk ramps, etc. The developer will not be responsible for remedial roadwork or delineation for the disabled outside of the limits of their project.

4-2 COST PARTICIPATION

With the submittal of improvement plans for checking, the Consulting Engineer shall provide a written request to the Department for cost participation if the proposed work is beyond the Developer's responsibility. This application shall show the items of work, the estimated quantities, reimbursable costs, and justification for the request.

The Department will notify the Consulting Engineer by letter, as to the acceptance and the extent of cost participation prior to improvement plan approval.

The Consulting Engineer shall transmit the Department proposal to the developer for his approval prior to the final approval of the improvement plans. After approval of the Department proposal by the Developer, the Department will prepare a reimbursement agreement or include language in an improvement agreement, to provide for reimbursement to the Developer by the City/County. The reimbursement agreement or other such document, shall be fully executed by both parties, including approval by the governing body, prior to approval of the Improvement Plans.

Should the Developer not approve the Department proposal, time will be allowed for negotiation between the Developer and the Department to arrive at a mutually acceptable price or a separate course of action prior to final approval of the improvement plans.

Any portion of work shown on the Consulting Engineer's plans, for which the Department has agreed to cooperate, shall not be segregated by note or legend, but shall be included in the general contract. The Department will reimburse the Developer for these cooperative items after the work has been accepted by the City Engineer and final payment of plan check and inspection fees has been made.

Final quantities will be determined by field measurement, observed jointly by the City Engineer, the Contractor, and the Developer or his designated agent.

Unit prices prepared for fee and bond shall be used as a basis for cooperative work. The City Engineer may negotiate unit or lump sum prices for items not usually encountered, or for unusual field conditions.

4-3 STREET TYPE AND DESIGN WIDTH

The standard approved street types and design widths for the Department are as follows:

City of Winters
Street Cross-Sections Table (in feet)

Street Type	ROW[1]	Street Section[2]	Travel Lanes #	width	Median[3]	Bike Lanes[4]	Parking Lanes[4]	Curb	Planter Strip	Sidewalk (separated)	Landscaping (Off-street pathway)	Fronting Homes (Yes/No)
Public Alley	20	20	n/a		n/a	n/a	n/a	n/a	n/a	n/a	n/a	n/a
Local Residential and Cul-de-Sac	57	35	2	10	None	None	7.5	0.5	5.5	5	None	Yes
Secondary Collector	66	40	2	12	None	Note[5]	8	0.5	7.5	5	No (No)	Yes
Primary Collector	76	50	2	12	Note[6]	5	8	0.5	7.5	5	No (No)	Yes
Arterial (2-lane)[7]	94	54	2	14	14	6	None	0.5	7.5	6	20	No
Arterial (2-lane) with Off-Street Path[7]	102	54	2	14	14	6	None	0.5	7.5	10 (Path)	(24) with off-street path	No
Arterial (4-lane) [7]	118	78	2 2	14 inside 12 outside	14	6	None	0.5	7.5	6	20	No
Arterial (2-lane) with Off-Street Path[7]	126	78	2 2	14 inside 12 outside	14	6	None	0.5	7.5	10 (Path)	(24) with off-street path	No

Notes:
1: ROW = Minimum required Right of Way.
2: Street Section – Measured "face-of-curb" to "face-of-curb".
3: Medians shall be landscaped unless noted otherwise.
4: Includes 2 feet of width in the gutter.
5: An additional 10 feet of Street Section and ROW is required when street bike lanes are required.
6: An additional 10 feet of Street Section and ROW is required when a median is required.
7: Individual residential driveway access prohibited. Local Street access is discouraged.
Street sections are minimum requirements; additional ROW, increased improved width or other requirements may be added when warranted and/or required by project approvals.

A. Alley

An alley shall be depressed in the center and have a right-of-way and surface width of 20 feet. An alley will be accepted as a public alley only when it is constructed in accordance with Standard Drawing 4-1. Other structural sections may be used with the specific approval of the City Engineer.

B. Local Residential Street

A local residential street shall have the indicated minimum right of way width and improvements in accordance with the Street Cross-Sections Table and Standard Drawings.

The Local Residential Street section is normally used for serving fewer than 400 single family units within subdivisions and for serving duplex developments.

The landscaping strip improvements shall be the responsibility of the Developer for initial construction and the responsibility of the adjacent landowners for future irrigation and maintenance.

C. Cul-De-Sac

Cul-de-sac streets shall be terminated with a bulb, which shall have right-of-way and back of curb radius dimensions conforming to Standard Drawing 4-14 and the following:

Approach Street	R/W Radius	Face of Curb Radius
Local Residential Street	61 feet	50 feet
Industrial Street	73 feet	60 feet

No cul-de-sac shall exceed 600 feet in length, measured from the face of curb of the intersecting street to the center of the bulb. Cul-de-sacs may exceed this length subject to providing a secondary route for emergency vehicle access and other requirements as approved by the City Engineer and the Fire Chief.

The minimum T.I. for a cul-de-sac shall be 6.5. Special T.I.'s will be determined for industrial cul-de-sacs or other special conditions.

A hammer-head bulb with a right-of-way and geometric dimensions conforming to Standard Drawing 4-16 may be approved by the City Engineer in lieu of the standard cul-de-sac when there is no vehicular access from the end of the cul-de-sac. Special turnaround designs may be approved by the City Engineer under unusual topographic or other conditions.

D. Secondary Collector and Industrial Streets

A secondary collector or industrial street shall have the indicated minimum right of way width and improvements in accordance with the Street Cross-Sections Table and Standard Drawings.

The Secondary Collector standard is required in all commercial, industrial, and multiple family developments and normally used in the vicinity of parks, schools and other public facilities. It is also used in residential areas when serving more than 400 residential units.

The requirement for placement of sidewalks may be waived by the City Engineer for industrial use areas depending on adjacent users.

E. Primary Collector Street

A primary collector street shall have the indicated minimum right of way width and improvements in accordance with the Street Cross-Sections Table and Standard Drawings.

A primary collector standard may be required in commercial developments when warranted to provide a continuous center turning lane or raised landscaped median.

F. Arterial (2 lane) Street

An Arterial (2 lane) Street shall have the indicated minimum right of way width and improvements in accordance with the Street Cross-Sections Table and Standard Drawings. The street section shall have Class 1 off-street bike paths when warranted or required by the project approvals.

The Arterial (2 lane) Street standard may be required in commercial developments when warranted to provide a continuous center turning lane or raised landscaped median.

The Arterial (2 lane) Street standard shall be required when shown on the Circulation Master Plan or when required by the project traffic analysis. Refer to Section 4-3(J) "Added Width at Intersections" for intersection widening requirements.

G. Arterial (4 lane) Street

An Arterial (4 lane) Street shall have the indicated minimum right of way width and improvements in accordance with the Street Cross-Sections Table and Standard Drawings. The street section shall have Class 1 off-street bike paths when warranted or required by the project approvals.

The Arterial (4 lane) Street standard may be required in commercial developments when warranted to provide a continuous center turning lane or raised landscaped median.

The Arterial (4 lane) Street standard shall be required when shown on the Circulation Master Plan or when required by the project traffic analysis. Refer to Section 4-3(J) "Added Width at Intersections" for intersection widening requirements.

H. Arterial Street Medians

Arterial (4 lane) Streets shall have a solid non-traversable landscaped median between cross street intersections. Median openings shall be spaced at least 650 feet apart.

Arterial (2 lane) Streets shall have a solid non-traversable landscaped median between cross street intersections.

Minor street intersections (with right turns only) should be no closer than 450 feet from each other or from the cross street intersections. Major driveways which will serve significant traffic volume, as determined by the City Engineer, shall be considered as intersecting streets and shall be no closer than 450 feet from each other or from cross street intersections. All other driveways shall have right rums only. Driveways should be located as far apart as practical with a minimum of 150 feet between driveways or from driveways to intersections. Major driveways that will be signalized shall be designed in accordance with public street intersection standards.

All arterial streets shall be designed to the appropriate arterial standards regardless of whether or not they are apparent on the Winters Circulation Master Plan. Where streets are constructed with the arterial standard widths, it is intended that they meet all the standards specified herein.

All arterial streets shall be subject to full or partial access control (relinquishment of access rights by abutting properties) at the discretion of the City Engineer.

All major streets shall be required to accommodate "U" turns at all traffic signals. A minimum outside clear path radius of 44 feet of pavement shall be required.

I. Frontage Road

A street which provides service to abutting property and control of access alongside another street for which direct access is prohibited or undesirable. Frontage roads adjacent to State freeways shall conform to the full width standards for secondary collector streets, except the sidewalk may be omitted on the freeway side.

J. Added Width at Intersections

Additional width shall be added for dedicated right turn lanes, additional left turn lanes, deceleration/transition lanes, as required by project approvals and (any) traffic impact study. All such width additions shall be subject to review and approval by the City Engineer.

4-4 RIGHT-OF-WAY WIDTH

Building setbacks, landscaping requirements, and parking requirements shall be based on the ultimate right-of-way width regardless of the location of existing public street improvements or right-of-way lines. In case of conflict with any zoning code requirements, the higher standard shall apply.

4-5 STRUCTURAL SECTION

The following standards for the design of structural sections shall govern the preparation of plans for proposed improvements.

A. The minimum allowable thickness of the pavement section on alleys shall be 3 inches of Asphalt Concrete, Type B, on 8 inches Aggregate Base, Class 2.

B. Structural sections for all roadways 20 feet or wider shall be designed in accordance with the California Department of Transportation Highway Design Manual (Fifth or later Edition), "Topic 608 - Asphalt Concrete Pavement Structural Section Design" or other method as approved by the City Engineer. The safety factor needed for gravel equivalent increase shall be 0.2 feet for a base type of aggregate base.

C. The minimum traffic indices (T.I.) used for the calculation of the roadway structural sections shall be as follows:

Street Type	Minimum Traffic Index
Local Residential Streets	5.0
Secondary Collector Streets	6.0
Cul-de-Sac Streets	6.5
Primary Collector Streets including Bus Routes	7.0
Arterial (2 lane) Streets	9.0
Arterial (4 lane) Streets	10.0

Special T.I.'s will be provided to the consulting engineer for industrial cul-de-sacs or other unique conditions.

D. A soil report of the R-value of subgrade of basement soil, along with calculations for structural pavement sections, shall be submitted with any plan indicating construction of roadway. In lieu of a soil report, an R-value of 5 may be assumed. Design thicknesses shall be rounded up to the next 0.05 foot increment. Minimum design thickness for asphalt concrete portion shall be 0.30 feet. Geotextile fabric shall be placed on compacted subgrade prior to AB placement when the R-value is less than or equal to 15.

E. Assuming an R-value of 5, the following minimum structural sections shall be used:

A. Street Type	Structural Section	
	Asphalt Concrete	Aggregate Base
Local Residential Streets	0.30 ft.	0.70 ft.
Secondary Collector Streets	0.30 ft.	1.10 ft.
Cul-de-Sacs	0.30 ft.	1.10 ft.
Primary Collector Streets	0.35 ft.	1.15 ft.
Arterial (2-lane) Streets	0.45 ft.	1.70 ft.
Arterial (4-lane) Streets	0.55 ft.	1.90 ft.

F. Portland cement concrete streets will not be allowed.

G. The use of alternate road building materials will be allowed if supported by a sound pavement design study prepared by a geotechnical engineer and approved by the City Engineer. These alternate road building materials may include but not be limited to the following:

1. Subgrade stabilizing and/or isolating geotextiles and grids
2. Pavement stress absorbing interlayers
3. In-situ soil and subgrade stabilizing add mixtures
4. The use of recycled materials in the manufacture of subbase, subgrade, and asphalt concrete
5. Rubberized asphalt concrete
6. Subbase drainage facilities

H. Positive structural section drainage facilities shall be required if the basement soil has permeability less than 100 feet per day. Drainage system design shall be in accordance with California Department of Transportation Highway Design Manual (Fourth Edition) or other method as approved by the City Engineer. Subbase drainage shall be provided at all sag points in impermeable soils.In transition areas from one street width to another street width standard, the heavier structural section shall be used in the transition area.

4-6 PROFILE STANDARDS

The following standards for the design of profiles shall govern the preparation of plans for proposed improvements. See Section 3-7(D).

A. The minimum grade on new streets shall be 0.30 percent except that the minimum curb and gutter grade around intersection corners and through cul-de-sacs shall be 0.50 percent. Curb and gutter elevations on crest and sag vertical curves shall be adjusted to conform to a 0.25 percent minimum grade.

B. The minimum grade of gutter sections constructed on existing streets shall be 0.20 percent.

C. Standard cross slope on new streets shall be 2.0 percent. A minimum cross slope of 1.5 percent and a maximum of 3.0 percent shall be maintained throughout all areas of cul-de-sacs and 90° elbow intersections.

D. The minimum cross slope on street widening shall be 1.5 percent and the maximum cross slope shall be 3.0 percent. The cross slope of the widening shall conform to the cross slope of the existing pavement whenever possible. Pavement overlay to street centerline will be required when this is a feasible method of meeting this standard.

E. When two streets intersect, neither street shall have a grade greater than 3.0 percent for a minimum distance of 40 feet measured from the curb line of the intersecting street, except in unusually rough terrain, as determined by the City Engineer. The centerline of the lesser intersecting street shall meet the crown slope at the projected lip of the gutter. Crown slope may be reduced to 1.0 percent within the intersection, if necessary.

The minimum vertical curve length allowable at the intersection of two grades shall be 100 feet. Vertical curves on residential and collector streets may be omitted where the algebraic difference in grades does not exceed 2.0 percent. Vertical curves on all other streets may be omitted where the algebraic difference in grades does not exceed 1.5 percent. The minimum vertical curve data to be computed and shown on the plans shall consist of the point of intersection elevation, the tangent gradients, the middle ordinate and the length of curve, BVC, EVC stationing, and elevations at ¼ points or every 50 feet whichever is less.

F. The design speed and minimum stopping sight distance over any segment of urban roadway shall be as follows unless the City Engineer specifically approves a lesser design speed:

Street Type	Recommended Design Speed	Minimum Stopping Sight Distance
Local Residential	30 MPH	250 feet
Industrial	35 MPH	250 feet
Secondary Collector	35 MPH	250 feet
Primary Collector	40 MPH	300 feet
Arterial (2-lane)	45 MPH	360 feet
Arterial (4-lane)	55 MPH	500 feet
Rural/unposted	65 MPH	660 feet

The minimum design speed for rural and/or unposted roadways shall be 65 MPH or as determined by performance of a recent Speed Survey (or conform to the maximum allowable vehicular speed per the California Vehicle Code). Stopping sight distance for other design speeds shall be in accordance with California Department of Transportation Highway Design Manual (Fifth or latest Edition) or as approved by the City Engineer.

Stopping sight distance is measured from the driver's eyes, which are assumed to be 3.5 feet above the pavement surface, to an object 0.5-foot high on the road.

4-7 PARTIAL STREET

Partial streets may be permitted by the City Engineer along the boundary of a subdivision or property of the developer where the full right-of-way cannot be dedicated or where the complete street cannot be constructed, but will ultimately be constructed with adjacent development.

The minimum right-of-way width shall be 40 feet or one-half of the proposed right-of-way plus 10 feet, whichever is greater. Lesser right-of-way widths may be allowed when approved by the Governing Board in accordance with the State of California Streets and Highways Code.

Partial streets shall be constructed to a complete geometric and structural section for a minimum paving width, not including gutter, specified by the following:

A. On Local Residential Streets, the pavement width shall be 26 feet.

B. On Secondary Collector streets, the pavement shall extend ten feet past centerline for a total of 28 feet.

C. On Primary Collector streets, the pavement shall extend ten feet past centerline for a total of 33 feet.

Curb and gutter width is not included in the above pavement widths.

The intersection pavement edges shall have a minimum radius of 14 feet on the uncompleted side. All other edge of pavement radii shall be 25 feet or greater.

When paving partial construction of an ultimate street development, the edges of the current pavement on the uncompleted side are to be protected by use of 2"x6" pressure preservative treated wood or all-heart redwood headers, or by placing a minimum of 1-foot additional width of aggregate base material beyond the edge of pavement to the grade and depth of the adjacent structural section.

Partial streets shall be terminated with the end of the pavement perpendicular to the street unless otherwise specified below. A 2"x6" pressure preservative treated wood or all-heart redwood header, shall be required at the pavement ending.

Partial streets that terminate adjacent to an intersection or driveway shall be tapered 45 degrees to the street if right-of-way is available.

The end of a partial street that terminates a traveled lane in the direction of travel shall be tapered in accordance with the following equations:

Less than 45 mph, $L = WS^2/60$

Greater than or equal to 45 mph, $L = WS$

Where L = Taper Length along centerline, W = Taper Width reduction or widening (feet) and S = Design Speed (mph).

The design speed used in determining the taper shall be that given in the table in Section 4-6(F).

The City Engineer may require pavement tapers for the termination of partial streets that are different from the above.

4-8 OFFSET INTERSECTION

A. Streets intersecting any local residential street from opposite sides shall have their centerlines meet, or the offset between intersections shall be a minimum of 200 feet. Lesser distance may be approved for infill projects.

B. Streets intersecting any industrial or secondary collector street from opposite sides shall have their centerlines meet, or the offset between intersections shall be a minimum of 250 feet. Lesser distance may be approved for infill projects.

C. Streets intersecting any primary collector or arterial (2-lane) street from opposite sides shall have their centerlines meet, or the offset between intersections shall be a minimum of 300 feet. Pursuant to this section major access driveways shall be considered as streets with respect to offsets. Lesser distance may be approved for infill projects.

D. See Section 4-3(M) for intersection spacing requirements for arterial (4-lane) streets where there are raised median dividers.

E. The centerline of intersection streets shall be at right angles to each other, as nearly as practicable.

4-9 DRIVEWAYS

Driveway installation shall be in accordance with the Standard Drawings and the following:

A. Typically only one driveway (16' wide minimum) will be allowed per single family residence. A second driveway (8' wide minimum) may be allowable depending on zoning requirements. The minimum width for a single-family residential and duplex driveway shall be 16 feet. Maximum single-family residential and duplex driveway width shall be 24 feet for 2 cars and 32 feet for 3 cars at face of curb. Residential driveways shall be placed at least 3.5 feet from the adjacent property line except on cul-de-sacs. Residential and duplex driveways with plus grades shall have a rise of no more than 8 inches above the back-of-sidewalk grade at a point 7 feet from the back of sidewalk. The driveway shall not occupy more than the maximum percentage of the lot frontage, except in cul-de-sacs, in accordance with zoning requirements.

B. The maximum driveway slope shall be adjacent to the right of way, except for single family and duplex driveways, and in unusual terrain conditions, when specifically approved by the City Engineer. (The maximum algebraic difference in grade at any grade change within the public right-of-way and a driveway or between a driveway and public roadway shall be ten percent.) Driveway slopes and grade changes shall be designed to prevent "bottoming" or scraping of the intended vehicles' undercarriage or the pavement or concrete.

C. No driveway (including transition tapers) will be allowed within 10 feet of a side property line on commercial development. The City Engineer may approve exceptions for joint driveways based on extenuating circumstances. The City Engineer may require joint driveways including a joint use driveway agreement prior to approval of improvement plans.

D. All commercial and multiple family developments shall install medium driveways. All commercial and industrial driveways shall be a minimum of 24 feet wide, exclusive of flares or aprons. The design of major driveways, which will serve significant traffic volume, as determined by the City Engineer, shall be based on the width, cross section, and geometries of a secondary collector street. The City Engineer may require greater widths based on specific land uses. Driveways on all arterial streets shall have a minimum clear spacing of 150 feet between driveways. The City Engineer, when warranted by conditions at a particular site, may approve lesser spacing. Exceptions should be obtained as early as possible, prior to submission of improvement plans or development plans.

E. The standard driveway for industrial developments shall be heavy 45 feet wide.

F. When driveways are abandoned or relocated, the driveway sections must be removed and replaced with standard curb and gutter, sidewalk, and landscaping.

G. When existing street frontage improvements contains roll or vertical curb and gutter, medium driveways shall be installed for all accesses serving more than four single dwelling units.

H. Driveways entering levee roads and driveways entering commercial property on all roads shall have a slope not exceeding 5 percent for a minimum distance of 20 feet, measured from the edge of existing pavement. Driveway slopes and grade changes shall be designed to prevent

"bottoming" or scraping of the intended vehicles' undercarriage or the pavement or concrete. Driveways normally used by vehicles towing house or boat trailers shall have special requirements to be determined on an individual basis by the City Engineer.

I. Visibility requirements for driveways shall be in accordance with Standard Drawing 4-17. Increased visibility requirements may be required for driveways serving a significant amount of truck traffic.

J. Major commercial driveways which will serve significant traffic volume, as determined by the City Engineer, shall be considered as intersecting streets and shall conform to the requirements of Section 4-11 regarding offsets.

K. Driveways near major intersections shall meet the requirements of Standard Drawing 4-13. The City Engineer may grant exceptions based on extenuating circumstances.

L. Driveways and private roads accessing public streets with no curbs and gutters and sidewalks shall be paved with (either 3" asphalt concrete over 8" AB or a double chip seal on 8"). Driveways and private roads accessing public roads with sidewalks and/or curbs and gutters shall be paved with concrete (4" PCC on 6" AB) or asphalt concrete (3" AC on 8" AB).

4-10 ELBOW INTERSECTION

Elbows shall be required at right angle intersections in accordance with Standard Drawing 4-15. Only under unavoidable or extreme conditions will an elbow other than 90°±5° be permitted by the City Engineer.

4-11 CENTERLINE RADII

The curve data (delta angle, length, tangent- and radius) for all centerline curves as well as for all curves of design features that are not concentric with the center line shall be computed and shown on the plans.

The minimum radius curve for local streets shall be 200 feet with the exception that streets exceeding 1,000 feet in length and functioning as collectors serving over 99 lots and connecting to arterial streets shall have a minimum radius curve of 500 feet.

The minimum radius curve for collector and industrial streets shall be 500 feet.

The minimum radius curve for arterial (2-lane) streets shall be 800 feet.

The minimum radius curve for arterial (4-lane) streets shall be 2,000 feet.

Special consideration will be given to unusually difficult alignment problems. Any exception to the above minimum radius requirements must be approved by the City Engineer.

Where a centerline radius on a major street that is less than the above requirements is approved by the City Engineer, superelevation may be required.

A minimum tangent length of 200 feet is required between reversing curves on collector, industrial and arterial streets. A minimum tangent length of 50 feet is required for all local or collector streets approaching an intersection.

4-12 SIGHT DISTANCE AT INTERSECTIONS

Streets should not be designed to intersect the inside of curves or at any location where in general, sight distance will be inadequate for drivers to tell if they can safely enter the traffic flow or cross the street. The minimum distance from an intersection to a curve should be the applicable minimum sight distance listed below. The City Engineer for especially difficult design circumstances may make exceptions, only

if visibility easements to provide adequate sight distances are dedicated. Minimum intersection design sight distance standards shall be as follows:

Type of Street Being Entered	Recommended Design Speed	Minimum Sight Distance*
Local Residential	30 MPH	330 feet
Industrial	35 MPH	390 feet
Secondary Collector	35 MPH	390 feet
Primary Collector	40 MPH	440 feet
Arterial (2-lane)	45 MPH	500 feet
Arterial (4-lane)	55 MPH	550 feet

*Distance measured from an entering driver's eye position to the position of the closest approaching vehicle's far front comer.

The entering driver's eye position shall be assumed 3 feet to the right of the entering street's centerline, 3.5 feet above the pavement surface, and 11 feet clear of the nearest vehicle lane on the street being entered.

The position of the closest approaching vehicle's far front corner shall be assumed 3 feet from the edge of the nearest approaching vehicle lane and 4.25 feet above the pavement surface for each direction of travel.

Major driveways serving significant traffic volume, as determined by the City Engineer, shall be considered as intersecting streets with regard to intersection sight distance requirements. Minor driveways and private streets should provide the recommended intersection sight distance, and at a minimum, shall provide for stopping sight distance.

All streets and driveways shall conform to Standard Drawing 4-17 for corner visibility requirements, as well as to the requirements herein. Visibility easements shall describe an area to be maintained clear of any and all obstructions to a clear view from the adjacent streets. No sign, hedge, structure, natural growth, fence, or other obstruction to a clear view, higher than 2 1/2 feet above the nearest pavement surface (or traveled area where no pavement exists) shall be installed or maintained or shall be permitted to be installed or maintained within the easement area.

Visibility easements shall be recorded on subdivision maps when required, or by separate document if no map will be recorded.

All visibility easement areas between fences or walls and curbs or sidewalks shall be improved as follows:

A. Low profile landscaping providing that it is maintained by a responsible public entity and the landscape plans receives approval from the Department.

B. Standard Portland cement concrete sidewalk shall be placed in all areas having a width of 3 feet or less, and in all areas within intersection corner roundings.

C. All areas having a width greater than 3 feet and not within intersection comer roundings shall be surfaced with 2 inches of asphalt concrete or other impervious, non-raveling surfacing subject to the approval of the City Engineer.

4-13 INTERSECTION CORNER RADII

Minimum right-of-way and edge of pavement radii for intersection corner roundings shall be in accordance with the Standard Drawings and the following:

Street Type	Face of Curb Radius	R/W Radius
Local Residential Street	25 feet	14 feet or chord
Collector Street	30 feet	Chord
Arterial Streets	35 feet	Chord

All intersection pavement edges on partial streets shall have a minimum radius of 14 feet on the uncompleted side. All other edge of pavement radii shall be 25 feet or greater as determined by turning requirements at the subject location.

4-14 BUS STOP

Bus stop turnouts and shelters shall be provided on primary collectors and all arterial streets at all intersections with collector or arterial streets. Bus stop turnouts may also be required at other locations as determined by the City Engineer. Bus stop turnouts shall be located on the far right hand side of the intersection, unless otherwise required by the City Engineer, and shall be in accordance with Standard Drawing 4-18.

Bus stop turnouts, whether mid-block or corner, shall be provided at approximately ¼ mile intervals along arterial streets.

4-15 SIDEWALK RAMP

Sidewalk ramps shall be constructed at all street intersections and at other locations where required by the City Engineer, in accordance with State Standard Plans A88A and A88B. In general, Plan A88A Detail A shall be utilized at all intersections with a collector and arterial roadway and Detail B may be allowed by approval. Plan A88A Detail B may be utilized when both intersecting roadways are local residential and Detail B may be allowed by approval.

Case "E" is the preferred standard at local residential intersections. Case "A" is the preferred standard at collector and arterial intersections. The case number for each ramps shall be specified on improvement plans.

The designation and delineation of crosswalks shall be approved by the City Engineer.

At "T" intersections, one ramp shall be constructed in the appropriate position at the nearest property line on the far side of the through street, opposite the ramps at the comer rounding of the intersecting street so that pedestrians are encouraged to cross the through street on the leg unaffected by left-turning traffic from the "T" street.

4-16 CURB AND GUTTER

Curb and gutter shall be installed adjacent to all developments in accordance with Standard Drawing 4-2.

Roll Curb and Gutter may be used in certain urban areas or urban in-fill areas, where rolled curb and gutter exists as approved by City Engineer

Temporary AC dikes when permitted by the City Engineer shall be Caltrans Type "A" (6" high" per Caltrans Standard Plan A87.

4-17 CROSS GUTTER

Cross gutters may be permitted on local residential streets with the specific approval of the City Engineer when the intersection cannot reasonably be drained to an underground system. See Standard Drawing 4-4. No cross gutter will be allowed on collector or arterial streets. Cross gutters will also not be allowed on any approach to a signalized intersection.

4-18 SIDEWALK

Sidewalks shall be provided in accordance with these standards and the Standard Drawings.

All school, park, and commercial developments shall have 8-foot sidewalks along all frontages, with the exception that 6-foot sidewalks may be used along fenced play areas where no access is provided, as determined by the City Engineer.

Where existing utility poles and other obstructions are situated within the planned sidewalk section, a minimum of 4 feet of clear uninterrupted sidewalk area shall be provided, subject to approval of the City Engineer. Where it is necessary to widen the sidewalk beyond its standard width to attain the 4-foot clearance, the widened area shall extend a minimum of 5 feet beyond each side of the obstruction and a 10-foot taper on each side of the widening shall be required.

Where sidewalks end in fill areas, the fill shall be extended beyond the end of the sidewalk for a minimum distance of 6 feet. As an alternate, a cut-off wall may be constructed at the end of the sidewalk and appropriate connection to the existing public street shall be provided for pedestrians traveling beyond the end of the sidewalk.

With approval by the City Engineer, sidewalks may meander within the right of way. The width of the sidewalk will correspond with the design width of the street. The cross slope on meandering sidewalks shall be 2%. The distance between the back of the curb and the edge of the sidewalk can vary, but shall not be less than 5 feet nor more than 25 feet, except at transitions. If trees are to be planted in the landscaping, the minimum distance between the back of the curb and the edge of the sidewalk shall be 5 feet. Meandering sidewalks will not be used along residential lot frontages. Straight separated sidewalks are to be installed on residential lot frontages. The sidewalk will have no abrupt changes in direction and will be constructed using only tangents of any length and inside radii of at least 150 feet. The City Engineer may approve other configurations of meandering sidewalks to save existing trees or for special design applications.

Truncated dome shall be installed in conformance with the latest ADAAG guidelines (or regulations when adopted). The use of truncated dome at commercial driveway approaches in the direction of travel shall be in conformance with ADAAG guidelines and, where not specifically mandated when the guidelines are ratified, at the discretion of the City Engineer and the Department of Public Works.

4-19 PEDESTRIAN LANE

Pedestrian lanes or walkways within a development shall be constructed with a minimum of 4 inches of Portland cement concrete, Class "A", on six inches of aggregate base for the full width of the easement. Pedestrian lanes likely to be subject to maintenance vehicle traffic shall be constructed of a minimum of 6 inches of Portland cement concrete, Class "A", on six inches of aggregate base.

The maximum grade for pedestrian lanes shall be 5.0 percent in the direction of travel, except at any curb ramps. The maximum cross slope shall be 2 percent. The design shall also comply with ADA requirements for an accessible path.

Pedestrian lanes, where situated between lots, shall be fenced with chain link fencing from the street right of way to the back lot line. These fences shall be 6 feet high from the building setback line to the back lot line and 36 inches high from the building setback line to the street right-of-way line.

All pedestrian lanes shall have lighting installed in accordance with Section 5, Street Light Design.

4-20 REPLACING CULVERTS

The Developer shall replace existing inflow and outflow cross culverts as determined by the City Engineer.

4-21 TRENCHING IN EXISTING PAVED ROADWAYS

Crossings other than perpendicular crossings of existing roadways and all trenching in high traffic locations shall provide for select backfill material and increased structural section depth over the standard for that particular roadway. Boring may be required on arterial streets where, in the opinion of the City Engineer, high peak hour traffic volumes or other unusual conditions exist. The Developer may be required to coordinate trenching work schedules to avoid cutting new pavement in instances where repaving is planned by the Department. No trenching will be permitted on any street that has been recently constructed or has been overlaid within the last three years. When such trenching cannot reasonably be avoided, such work should be in accordance with Standard Drawings 4-20 and 4-21.

4-22 TESTING OF MATERIAL

Testing of materials to be utilized in work performed under the Standard Construction Specifications shall be performed in accordance with the methods of the Laboratory of the State of California, Department of Transportation. Unless agreed to in advance, all testing shall be ordered and/or performed by the Department. Signed copies of the test results, as required, shall be submitted to the City Engineer. Test results shall show clearly the name of the individual and firm performing the tests, as well as the name of the project, the date of sampling, and the date of testing. Tests performed by the Department will be charged to the Developer as part of inspection billing.

The Department shall determine the minimum required tests. Two copies of any Federal Housing Administration required soils tests shall be submitted with proposed plans.

4-23 STREET NAME

All roads and streets within a development shall be named by the Developer subject to the approval of the City. No duplication of names already in use or previously proposed will be permitted. Sound-alike names or names with more than 17 spaces are not acceptable. Street names at intersections shall be continued on both sides of the intersecting streets. Streets that change direction by an angle equal to or greater than 90° shall be known by a different name, except for those roads deemed as meandering by the City Engineer. Use of the suffix "Court" is reserved for cul-de-sacs.

Street name signs shall be furnished and erected by the Developer. Street name signs shall conform to the requirements of the Standard Construction Specifications and these Improvement Standards.

Street names and street name sign locations shall appear on plans submitted for approval. Sign details shall be as shown on Standard Drawing 4-22.

Street name signs for private roads shall be the same as for public streets (Standard Drawing 4-22).

4-24 STREET SIGN LOCATION

Street sign locations shall conform to the following:

A. Two street name sign installations are required at each intersection where one or both of the intersecting streets are a primary collector or greater. At a four-way intersection, the installations shall be located on both far right-hand comers of the intersection relative to the street having the greater right-of-way width or relative to the more important street if right-of-way widths are equal.

   At a "T" intersection, the first installation shall be located on the far right-hand corner of the intersection, relative to the through street, and the second installation shall be located adjacent to the through street at a point in line with the centerline of the terminating street.

B. One street name sign installation is required at each intersection where both intersecting streets are secondary collector and/or local residential streets. At a four-way intersection, the installation shall be located on one of the far right-hand corners of the intersection relative to the street having the greater right-of-way width or relative to the more important street if the right-of way widths are equal. At a "T" the installation shall be located on the far right-hand comer relative to the through street. Intersection.

C. For highways with frontage roads, the street name sign installations shall be located in the divider strip between the frontage road and the main traveled lanes of the highway. All other requirements shall be as outlined above, except that only one sign will be required (in the divider strip in line with the centerline of the minor street) when there is no opening in the divider strip for access to the main highway.

D. On arterial streets, the street name sign installations are to be located as required by the City Engineer.

E. Street name signs shall be placed on street light poles wherever possible, using standard clamp-on "L" brackets.

F. At signalized intersections, street name signs shall be placed on all four comers of four-legged intersections and on three comers on "T" intersections. In addition, internally illuminated street name signs are to be installed on their own clamp-on steel mast arms, 9'-3" in length, 3-5/8' in diameter, mounted at the 27-foot level.

4-25 TRAFFIC SIGNS

All cul-de-sac and dead-end (stub) streets where the curb at the centerline of the end of the street is not visible from the standard driver's eye position at the entering intersection shall be posted with a standard 24" x 24" code W53 (Not A Through Street) sign. The bottom of the sign shall be a minimum of 7 feet above the sidewalk. The standard location for the W53 sign is on the right hand side at the tangent point of the comer rounding, 6 inches (minimum) from the back of sidewalk.

Street names and stop signs and all other regulatory and warning signs to control traffic in accordance with the state and federal manuals, such as speed zones signs shall be paid for and installed by the developer or subdivider.

4-26 SURVEY MONUMENTS

Survey monuments shall be installed in accordance with the provisions of Section 12 of these Standards.

All street monuments set shall comply with Drawing 4-26 and shall be shown on the recorded Map for the project. Each monument set shall clearly show the registration number of the licensed Civil Engineer or Land Surveyor who prepared the final or parcel map.

4-27 PERMANENT BARRICADE

Where improvements are temporarily terminated on a street proposed to be extended in the future, the improvements shall include a permanent type barricade at the end of the street extending completely across the right-of-way to prohibit access and to serve as a warning to the public. The barricade shall be constructed, erected, painted, and signed in accordance with Standard Drawing 4-23. When necessary, barricades may be lengthened by making the 2" x 12" plank continuous with splicing at the posts.

Gates may be required where streets stub into public park areas or like areas.

Sidewalk barricades shall be constructed at the end of sidewalks where pedestrians cannot safely continue beyond the end of the sidewalk. Sidewalk barricades shall conform to Standard Drawing 4-23.

4-28 STREET TREES

Permission to remove any tree in public rights-of-way or easements shall be obtained from the Department of Public Works in advance. A Tree Removal Permit is required for all city tree removals. An Encroachment Permit may also be required depending on the location of the tree relative to public the right of way.

All trees removed from within the ultimate right-of-way shall be replaced with trees from the approved street tree list, if required by the project conditions of approval, or required by the City Engineer.

Trees shall not be planted any closer than five feet from the back of sidewalks adjacent to streets unless approved by the City Engineer. If trees are approved to be planted closer than 5 feet, then a root control barrier shall be installed. A 20-foot wide panel shall be centered on the trunk of each tree planted. Root control panels adjacent to sidewalks shall be 12" deep minimum. Root control panels adjacent to curb and gutter shall be 18" deep minimum. Root control panels adjacent to median curbs shall be 24" deep minimum.

Tree shall not be planted in areas where there is less than 4 feet of width between concrete improvements such as sidewalk and curb.

Approved trees for planting in public rights-of-way and public easements are listed as follows (desired trees not listed may be planted with the approval of the City):

Master Street Tree List – Trees over 40' High

Botanical Name	Common Name	Evergreen	Flowers	Drought Resistant	Growth Rate	Tree Spacing
Acer freemanii	Maple, 'Autumn Blaze'				Moderate	50'
Brachychiton populneus	Bottle Tree	X	X		Moderate	60'
Cedrus deodara	Deodar Cedar	X		X	Moderate	30'
Celtis australis	European Hornbeam				Moderate	35'
Fraxinus americana	White Ash, 'Autumn Purple'				Moderate	35'
Fraxinus americana	White Ash, 'Chicago Regal'				Moderate	35'

Master Street Tree List – Trees over 40' High						
Botanical Name	**Common Name**	**Evergreen**	**Flowers**	**Drought Resistant**	**Growth Rate**	**Tree Spacing**
Ginkgo biloba	Ginkgo, 'Auturn Gold' (male clones)				Slow	30'
Gymnocladus dioica	Kentucky Coffee Tree (male clones)				Moderate	30'
Magnolia grandiflora	Southern Magnolia		X		Moderate	30'
Pinus canariensis	Canary Island Pine	X			Fast	30'
Pistacia chinensis	Chinese Pistache - fruitless varieties only, 'Keith Davey' (male clones)				Moderate	30'
Pistacia chinensis	Chinese Pistache - fruitless varieties only, 'Pearl Street', 'Red Push' (male clones)				Moderate	30'
Platanus acerifolia	London Plane , 'Bloodgood'				Moderate	35'
Platanus acerifolia	London Plane , 'Yarwood'				Moderate	35'
Platanus orientalis	Oriental Plane				Moderate	35'
Platanus x histanica	London Plane, 'Columbia'				Moderate	30'
Quercus agrifolia	Coast Live Oak	X		X	Moderate	35'
Quercus buckleyi	Texas Red Oak			X	Moderate	35'
Quercus douglasii	Blue Oak			X	Slow	35'
Quercus lobata	Valley Oak			X	Moderate	35'
Quercus robur	English Oak				Moderate	35'
Quercus shumardii	Shumard Red Oak			X	Moderate	35'
Quercus suber	Cork Oak	X		X	Moderate	35'
Quercus wislizenii	Interior Live Oak	X		X	Moderate	35'
Sequoia sempervirens	Coast Redwood	X			Fast	25'
Taxodium distichum	Montezuma Bald Cypress				Moderate	30'
Ulmus parvifolia	Chinese Elm,				Fast	30'

Master Street Tree List – Trees over 40' High						
Botanical Name	**Common Name**	**Evergreen**	**Flowers**	**Drought Resistant**	**Growth Rate**	**Tree Spacing**
	upright varieties, 'Athena', 'Allee'					
Zelkova serrata	Zelkova, Green Vase, Utility cut			X	Moderate	35'

Master Street Tree List – Trees Up to 40' High						
Botanical Name	**Common Name**	**Evergreen**	**Flowers**	**Drought Resistant**	**Growth Rate**	**Tree Spacing**
Acer buergeranum	Trident Maple				Moderate	30'
Acer campestre	Hedge Maple				Moderate	30
Acer rubrum	Maple, 'Autumn Glory'				Moderate	30'
Arbutus undeo	Strawberry Tree, 'Marina'	X	X		Moderate	40'
Carpinus betulus	European Hornbeam				Moderate	25'
Ceratonia siliqua	Carob	X			Moderate	25'
Cercis occidentalis	Redbud, 'California'		X		Slow	20'
Chilopsis linearis	Desert Willow		X	X	Moderate	20'
Koelreuteria bipinnata	Chinese Flame Tree		X		Moderate	30'
Koelreuteria paniculata	Goldenrain Treet		X		Moderate	30'
Lagerstroemia indica x L. fauri clones	Crape Myrtle		X		Slow	20'
Laurus nobilis	Grecian Laurel	X			Slow	25'
Malus arnoldiana	Arnold Crabapple		X		Moderate	20'
Olea europaea	Fruitless Olive, 'Swan Hill'	X			Slow	25'
Quercus frainetto	Oak, 'Forest Green'			X	Moderate	35'
Tilia cordata	Littleleaf Linden				Moderate	30'

Master Street Tree List – Trees Up to 40' High						
Botanical Name	**Common Name**	**Evergreen**	**Flowers**	**Drought Resistant**	**Growth Rate**	**Tree Spacing**
Ulmus wilsoniana	Hybrid Elms, 'Frontier', 'Prospector', 'Accolade', 'Pioneer'				Moderate	25'
Vitex agnus-castus	Chaste Tree		X	X	Slow	20'

4-29 FENCES

The location for fences or walls along public streets shall conform to the requirements of the City of Winters Municipal Code. Fences or walls shall not encroach upon visibility easements required by Section 4-12 and Standard Drawing 4-17. All fences and walls are subject to the height requirements of the City of Winters Municipal Code.

Fences and walls may require modification to accommodate street light poles and/or foundations.

4-30 PRIVATELY OWNED BRIDGE

A bridge intended for the sole use of the occupants of a multi-family type development or any bridge on a private road shall be designed to withstand an H-20 load, unless specifically approved by the City Engineer for a lesser loading. Other design features of the bridge, including but not limited to widths, railings, clearances and materials shall be in conformance with Department and State Standards. A soil report prepared by a qualified soil engineer will be required. Design calculations signed by the Consulting Engineer and including the registration number shall be required.

4-31 VEHICLE ACCESS AT STREET TERMINATIONS

Vehicular access shall not be permitted from the end of a stub street. To obtain vehicular access, the street must be extended through the property or properly terminated with a standard cul-de-sac bulb. In cases where no access is provided to the end of the street, a modified cul-de-sac bulb may be approved by the City Engineer (See Section 4-3 of these Standards).

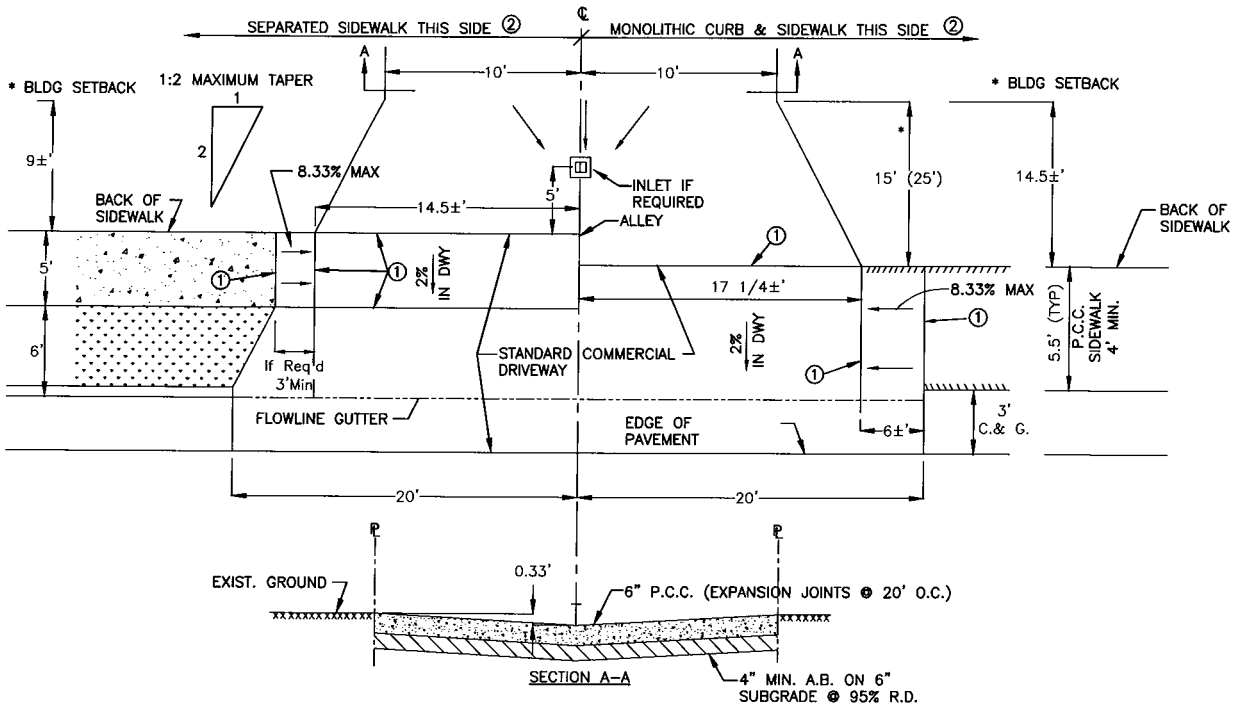

* DISTANCE MAY BE REDUCED FOR RETROFIT SITUATIONS SUBJECT TO APPROVAL OF THE CITY ENGINEER

① BREAK LINES SHALL BE PERPENDICULAR TO SIDEWALK EDGES

② SYMMETRICAL ABOUT CENTERLINE

City of Winters *PUBLIC WORKS DEPARTMENT*	DATE: DEC 2015
ALLEY DETAILS AND DRIVEWAY TRANSITIONS 35–FOOT (45–FOOT) DRIVEWAY	SHEET # 1 OF 1
CITY ENGINEER APPROVED Nicholas J. Ponticello P.E. NO. 49584	DRAWING #: 4–1

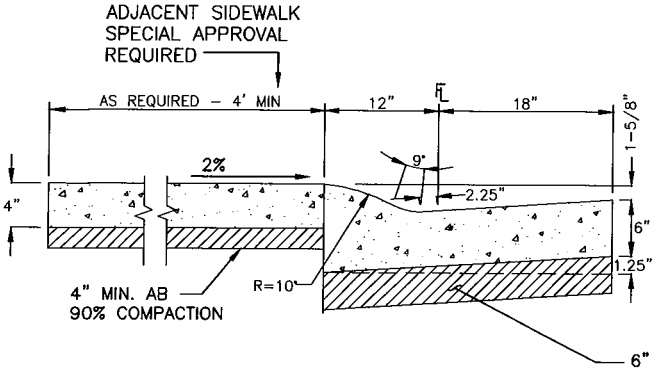

ROLL CURB
(REQUIRES SPECIAL APPROVAL)

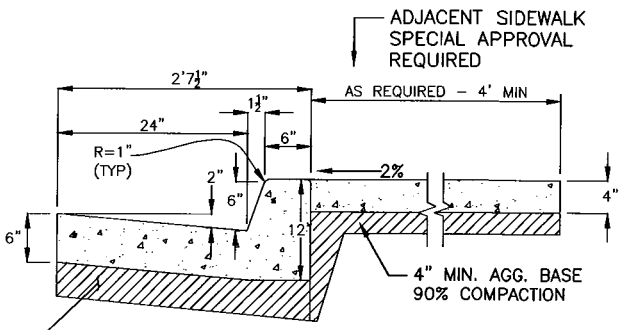

VERTICAL (A2-6)
(STANDARD)

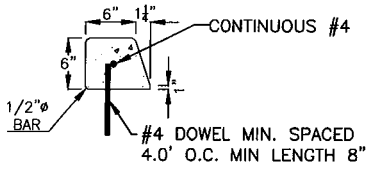

MEDIAN CURB (A3-6)
(RETROFIT ONLY)

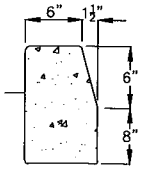

MEDIAN CURB (A1-6)

NOTES:

1. LOCATE 1/2" TRANSVERSE EXPANSION JOINTS OF ASPHALT IMPREGNATED CELOTEX IN SIDEWALK, CURB AND GUTTER AT 20' INTERVALS. ALL CONCRETE SHALL BE CLASS "B" PER CONSTRUCTION STANDARDS OR CLASS 3, 1" MAX PER CALTRANS STANDARD SPECIFICATION SECTION 90.
2. CONTINUE TOTAL REQUIRED ROAD SECTION DEPTH OF AB OR ASB TO BACK OF CURB
3. DEEP TOOL JOINTS SHALL BE 1" DEEP OR ¼ OF SECTION DEPTH, WHICHEVER IS GREATER.
4. SCORE LINES SHALL BE ¼" DEEP AND FORM A SQUARE PATTERN, PERPENDICULAR TO EDGES.
5. ALL EDGES SHALL HAVE ½" RADIUS.

City of Winters *PUBLIC WORKS DEPARTMENT*	DATE: DEC 2015
CURB, GUTTER & SIDEWALK	SHEET # 1 OF 1
CITY ENGINEER APPROVED *Nicholas J. Ponticello* P.E. NO. 49584	DRAWING #: 4-2

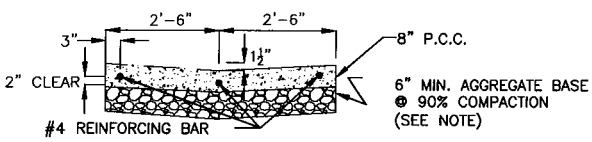

SECTION A–A

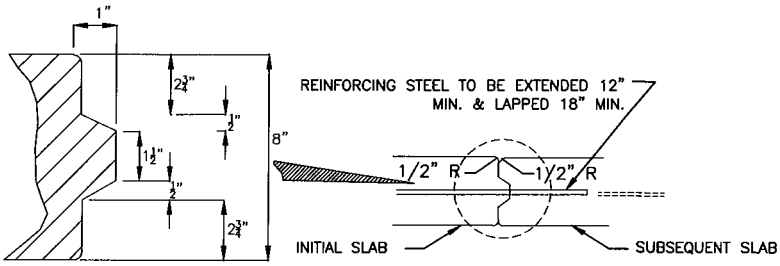

CONTACT JOINT DETAILS

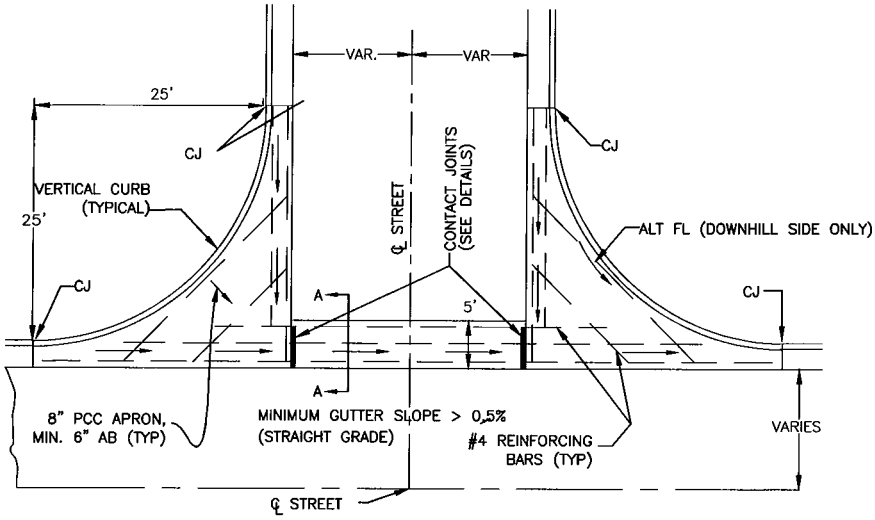

NOTES:

6" MIN. AB TO BE PLACED WITH LIMITS OF CROSS GUTTER. AB SHALL EXTEND TO SUBGRADE OF DEEPER ADJACENT STREET SECTION. SIDEWALK AND RAMPS NOT SHOWN.

CJ – DENOTES CONSTRUCTION JOINT LOCATIONS

City of Winters *PUBLIC WORKS DEPARTMENT*	DATE: DEC 2015
CROSS GUTTER	SHEET # 1 OF 1
CITY ENGINEER APPROVED Nicholas J. Ponticello P.E. NO. 49584	DRAWING #: 4–4

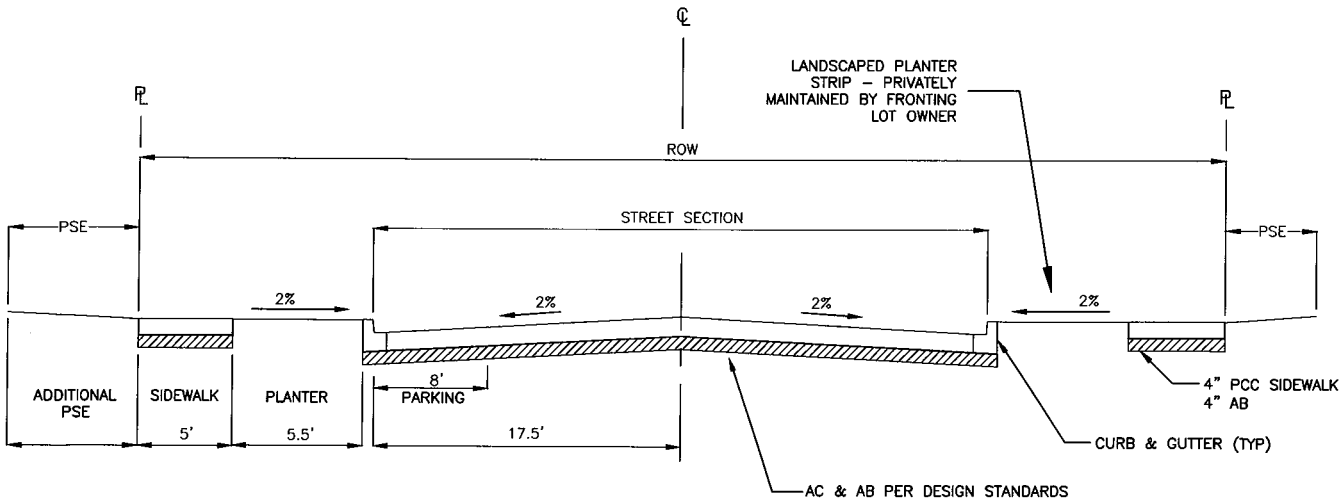

LOCAL RESIDENTIAL AND CUL–DE–SAC

T.I. = 5.0 (LOCAL)
6.5 (CUL–DE–SAC)

NOTE:
TREES IN LANDSCAPE MEDIANS AND STREETSIDE LANDSCAPING SHALL BE OF MAJESTIC STREET TREE SPECIES THAT CREATE LARGE CANOPIES MEETING CITY STANDARDS.

City of Winters *PUBLIC WORKS DEPARTMENT*	DATE: DEC 2015
LOCAL RESIDENTIAL & CUL–DE–SAC	SHEET # 1 OF 1
CITY ENGINEER APPROVED Nicholas J. Ponticello P.E. NO. 49584	DRAWING #: 4–5

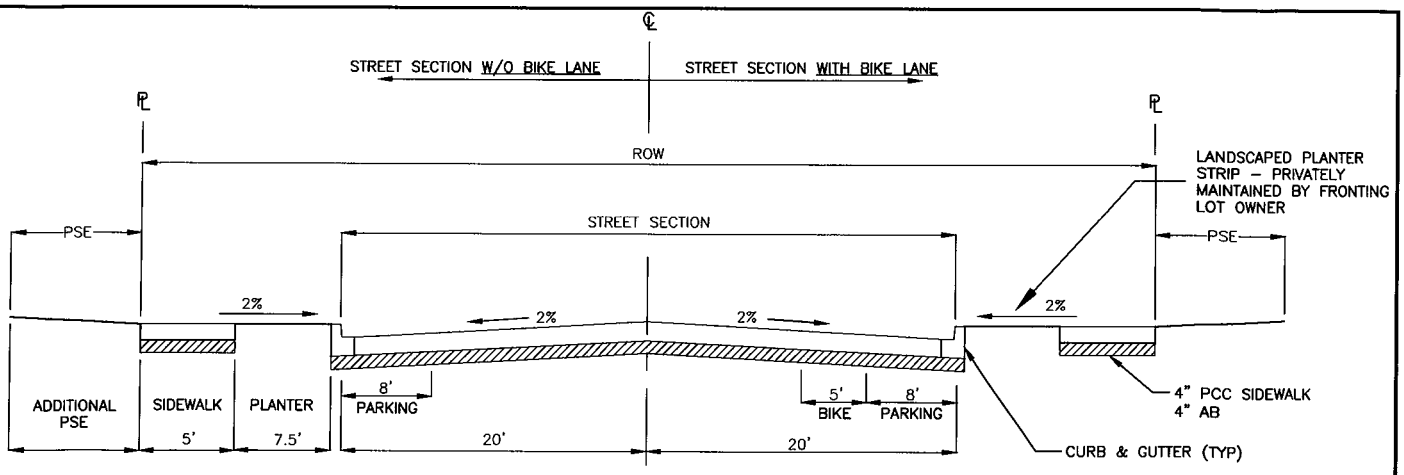

SECONDARY COLLECTOR

T.I. = 6.0
6.5 (CUL–DE–SACS)
7.0 (BUS ROUTES)

NOTE:
1. TREES IN LANDSCAPE MEDIANS AND STREETSIDE LANDSCAPING SHALL BE OF MAJESTIC STREET TREE SPECIES THAT CREATE LARGE CANOPIES MEETING CITY STANDARDS.
2. AN ADDITIONAL 10 FEET OF STREET SECTION IS REQUIRED WHEN STREET BIKE LANES ARE REQUIRED.

City of Winters *PUBLIC WORKS DEPARTMENT*	DATE: DEC 2015
SECONDARY COLLECTOR	SHEET # 1 OF 1
CITY ENGINEER APPROVED Nicholas J. Ponticello P.E. NO. 49584	DRAWING #: 4–6

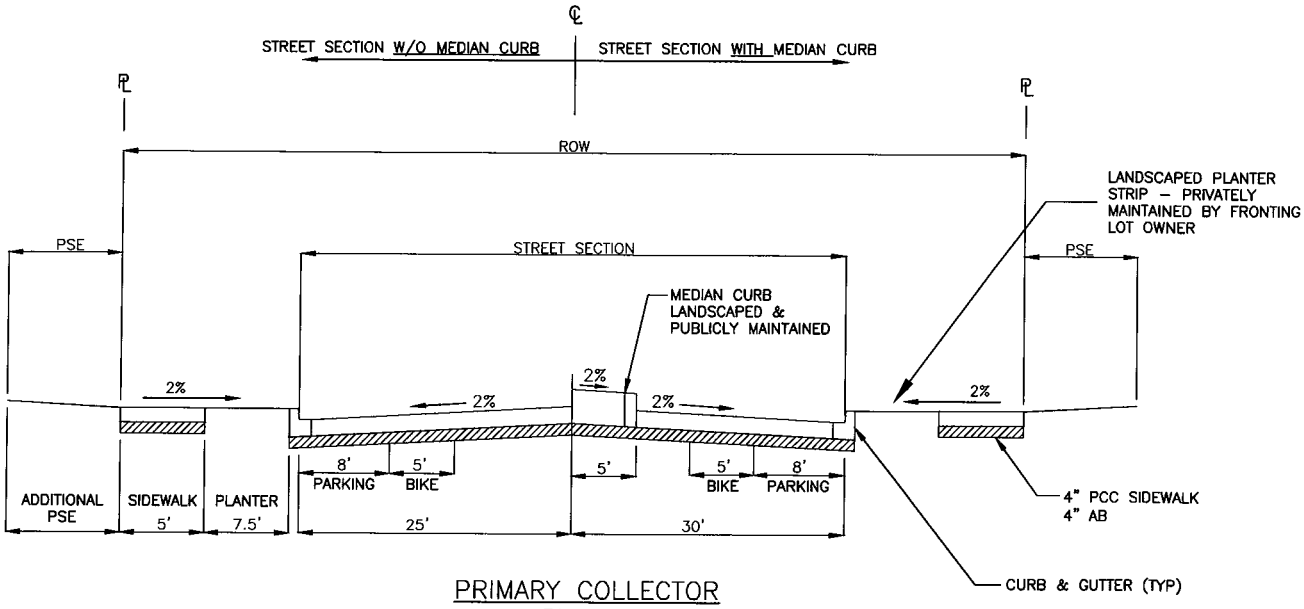

PRIMARY COLLECTOR

T.I. = 7.0

NOTE:

1. TREES IN LANDSCAPE MEDIANS AND STREETSIDE LANDSCAPING SHALL BE OF MAJESTIC STREET TREE SPECIES THAT CREATE LARGE CANOPIES MEETING CITY STANDARDS.
2. AN ADDITIONAL 12 FEET OF STREET SECTION IS REQUIRED WHEN A MEDIAN IS REQUIRED.

City of Winters *PUBLIC WORKS DEPARTMENT*	DATE: DEC 2015
PRIMARY COLLECTOR	SHEET # 1 OF 1
CITY ENGINEER APPROVED Nicholas J. Ponticello P.E. NO. 49584	DRAWING #: 4–7

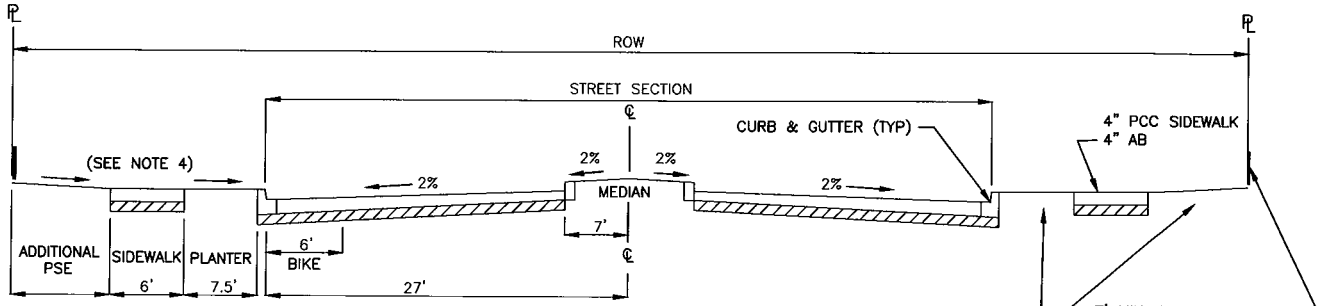

ARTERIAL 2-LANE
T.I. = 9.0

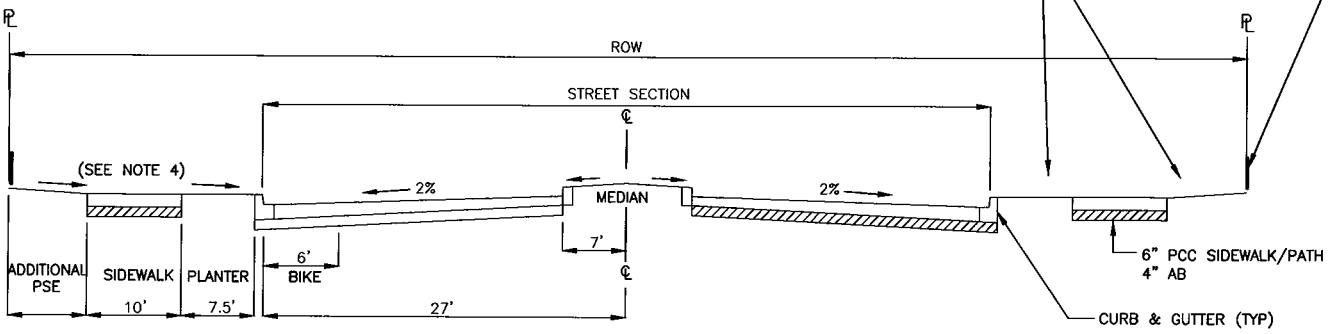

TYPICAL ARTERIAL 2-LANE WITH OFF-STREET PATHS

NOTE:
1. TREES IN LANDSCAPE MEDIANS AND STREETSIDE LANDSCAPING SHALL BE OF MAJESTIC STREET TREE SPECIES THAT CREATE LARGE CANOPIES MEETING CITY STANDARDS.
2. ALL LANDSCAPING PUBLICLY MAINTAINED.
3. SEE STANDARD DRAWING 4-24 FOR BIKE PATH DETAILS.
4. PROVIDE POSITIVE DRAINAGE SLOPE (2% MIN) FROM BACK OF PROPERTY LINE TO CURB OR PROVIDE LANDSCAPE DRAINAGE COLLECTION SYSTEM CONNECTED TO STREET STORM DRAINAGE SYSTEM.

City of Winters *PUBLIC WORKS DEPARTMENT*	DATE: DEC 2015
ARTERIAL 2-LANE ARTERIAL 2-LANE W/OFF STREET PATHS	SHEET # 1 OF 1
CITY ENGINEER APPROVED Nicholas J. Ponticello P.E. NO. 49584	DRAWING #: 4-8

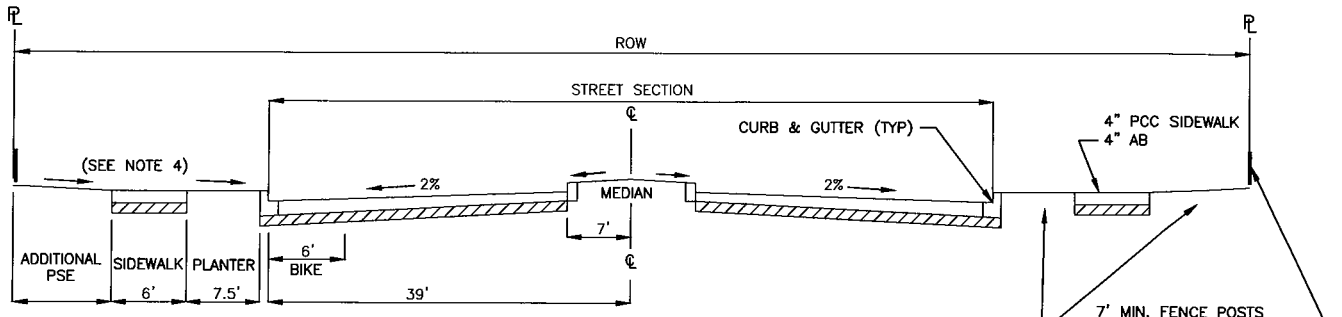

ARTERIAL 4-LANE
T.I. = 10.0

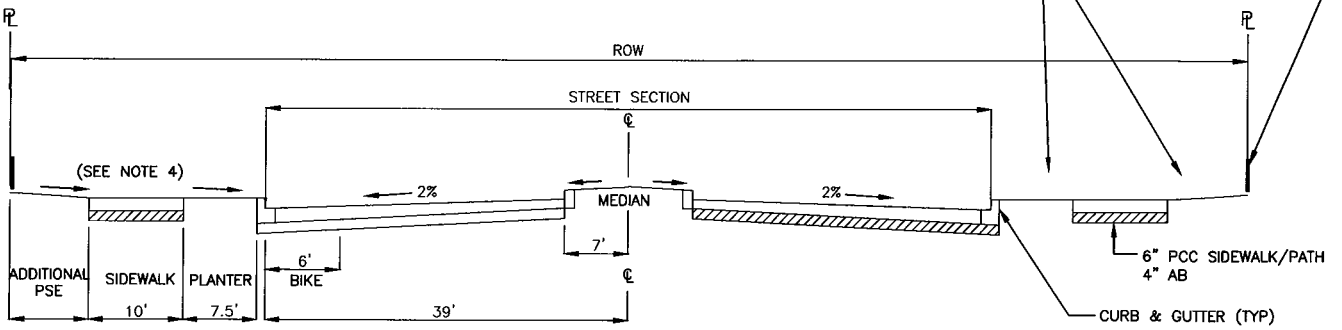

TYPICAL ARTERIAL 4-LANE WITH OFF-STREET PATHS

NOTE:
1. TREES IN LANDSCAPE MEDIANS AND STREETSIDE LANDSCAPING SHALL BE OF MAJESTIC STREET TREE SPECIES THAT CREATE LARGE CANOPIES MEETING CITY STANDARDS.
2. ALL LANDSCAPING PUBLICLY MAINTAINED.
3. SEE STANDARD DRAWING 4-24 FOR BIKE PATH DETAILS.
4. PROVIDE POSITIVE DRAINAGE SLOPE (2% MIN) FROM BACK OF PROPERTY LINE TO CURB OR PROVIDE LANDSCAPE DRAINAGE COLLECTION SYSTEM CONNECTED TO STREET STORM DRAINAGE SYSTEM.

City of Winters *PUBLIC WORKS DEPARTMENT*	DATE: DEC 2015
ARTERIAL 4-LANE ARTERIAL 4-LANE W/OFF STREET PATHS	SHEET # 1 OF 1
CITY ENGINEER APPROVED *Nicholas J. Ponticello* P.E. NO. 49584	DRAWING #: 4-9

STANDARD DRIVEWAY DETAILS

DRIVEWAY TYPES

DRIVEWAY	USAGE
LIGHT	RESIDENTIAL (1 – 3 HOUSES)
MEDIUM	COMMERCIAL OR MULTI–FAMILY (4 OR MORE)
HEAVY	INDUSTRIAL, MAJOR SHOPPING CENTERS

DESIGN STANDARDS

1. CONCRETE SHALL BE CLASS "A" PER CONSTRUCTION SPECIFICATIONS OR CLASS 3, 1" MAX GRADATION PER SECT 90 OF STANDARD SPECS; 7 DAY MINIMUM CURE REQUIRED PRIOR TO OPENING FOR TRAFFIC.

2. REINFORCEMENT
   LIGHT: NONE
   MEDIUM & HEAVY: #4, 12" OC EACH WAY

3. CONCRETE THICKNESS:
   LIGHT: 6 INCHES MINIMUM
   MEDIUM & HEAVY: 8 INCHES MINIMUM

4. DEEP TOOL JOINTS SHALL BE 1" DEEP OR ¼ OF SECTION DEPTH, WHICHEVER IS GREATER.

5. SCORE LINES SHALL BE ¼" DEEP AND FORM A SQUARE PATTERN, PERPENDICULAR TO EDGES.

6. ALL EDGES SHALL HAVE ½" RADIUS.

7. SIDEWALK AND DRIVEWAY SHALL HAVE A LIGHT BROOM FINISH PERPENDICULAR TO STREET. CURB AND GUTTER SHALL HAVE A LIGHT BROOM FINISH PARALLEL TO STREET.

8. LOCATE DRIVEWAYS SUCH THAT THEY ARE A MINIMUM OF 5' FROM FEATURES SUCH AS FIRE HYDRANTS, UTILITY POLES, DRAINAGE INLETS, CROSSWALKS, ETC.

9. DRIVEWAY SLOPE MAY NEED TO BE FLATTENED FOR HIGH CROWN STREETS TO AVOID BOTTOMING OR SCRAPING OF THE VEHICLES UNDERCARRIAGE.

City of Winters *PUBLIC WORKS DEPARTMENT*	DATE: DEC 2015
STANDARD DRIVEWAY DETAILS	SHEET # 1 OF 3
CITY ENGINEER APPROVED Nicholas J. Ponticello P.E. NO. 49584	DRAWING #: 4–11

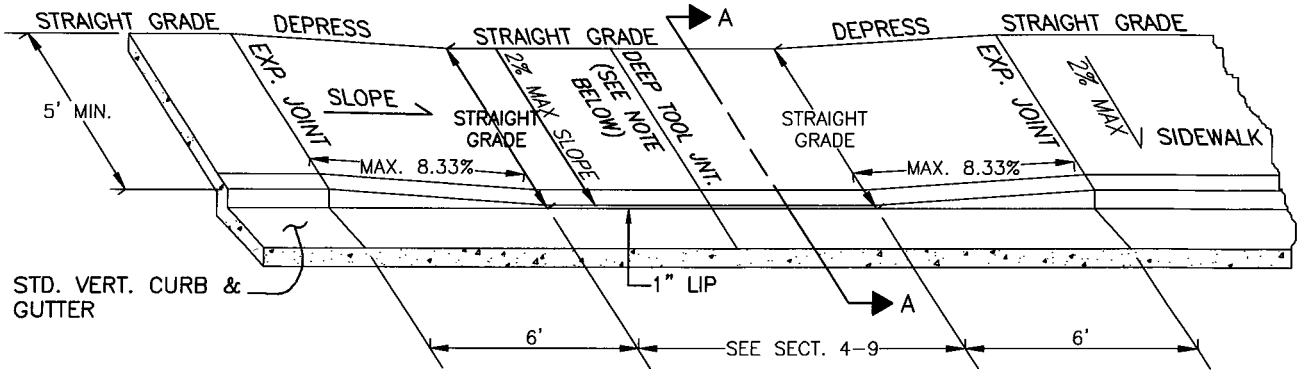

ALTERNATE TO DEPRESSING SIDEWALK:
ROUTE SIDEWALK AROUND DRIVEWAY & DEDICATE AN EASEMENT.

PERSPECTIVE

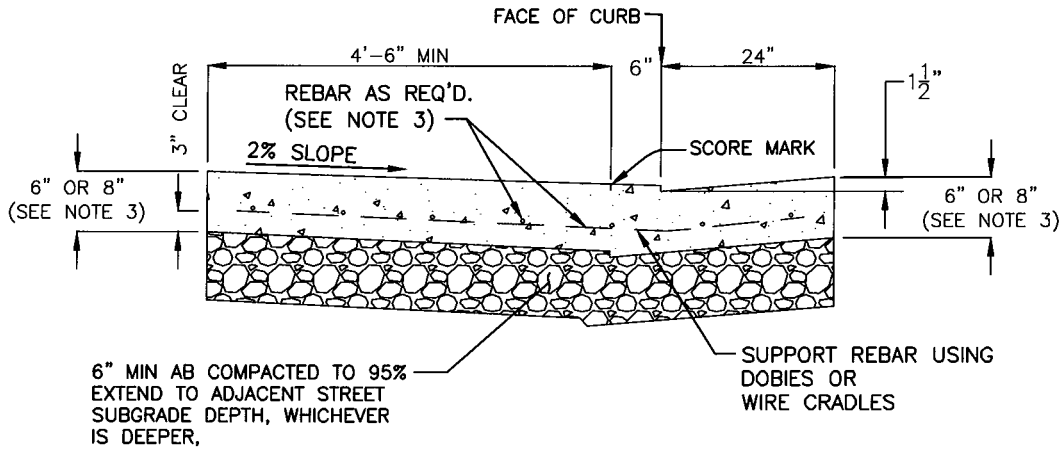

SECTION A-A

NOTES:
1. SCORE LINES SHALL BE 1/4" DEEP AND FORM A SQUARE PATTERN PERPENDICULAR TO EDGES.
2. LIP OF GUTTER SHALL HAVE A 1-1/2" BATTER.
3. SEE SHEET 1 DESIGN STANDARDS FOR REINFORCEMENT AND CONCRETE THICKNESSES FOR DRIVEWAY TYPES

City of Winters *PUBLIC WORKS DEPARTMENT*	DATE: DEC 2015
STANDARD DRIVEWAY DETAILS ADJACENT SIDEWALK	SHEET # 2 OF 3
CITY ENGINEER APPROVED Nicholas J. Ponticello P.E. NO. 49584	DRAWING #: 4-11

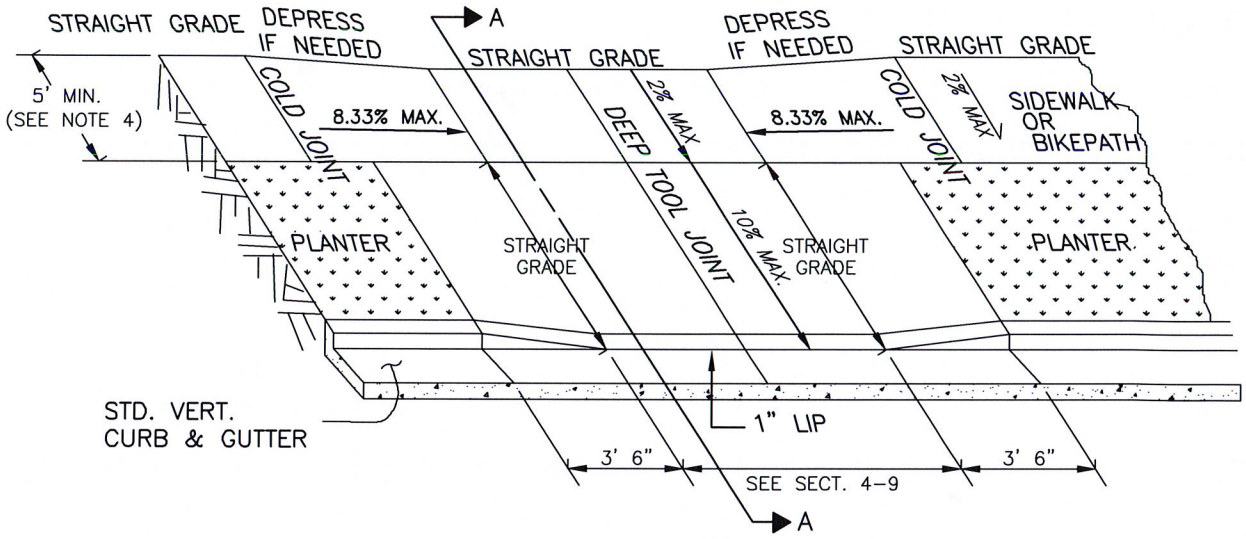

PERSPECTIVE

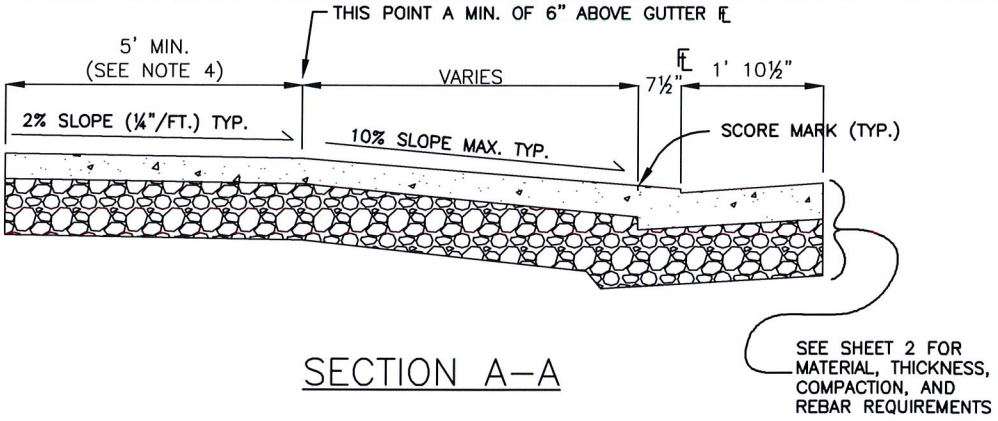

SECTION A–A

NOTES:

1. SCORE LINES SHALL BE 1/4" DEEP AND FORM A SQUARE PATTERN PERPENDICULAR TO EDGES.
2. LIP OF GUTTER SHALL HAVE A 1–1/2" BATTER.
3. SEE SHEET 1 DESIGN STANDARDS FOR REINFORCEMENT AND CONCRETE THICKNESSES FOR DRIVEWAY TYPES.
4. SIDEWALK WIDTH OF 4' OR MORE MAY BE ALLOWED TO CONFORM DRIVEWAY SLOPE TO 10% MAX IN SITUATIONS OF HIGH CURBS (12"±) OR TO MATCH EXISTING SIDEWALK. CITY APPROVAL IS REQUIRED.

City of Winters *PUBLIC WORKS DEPARTMENT*	DATE: DEC 2015
STANDARD DRIVEWAY DETAILS SEPERATED SIDEWALK	SHEET # 3 OF 3
CITY ENGINEER APPROVED Nicholas J. Ponticello P.E. NO. 49584	DRAWING #: 4–11

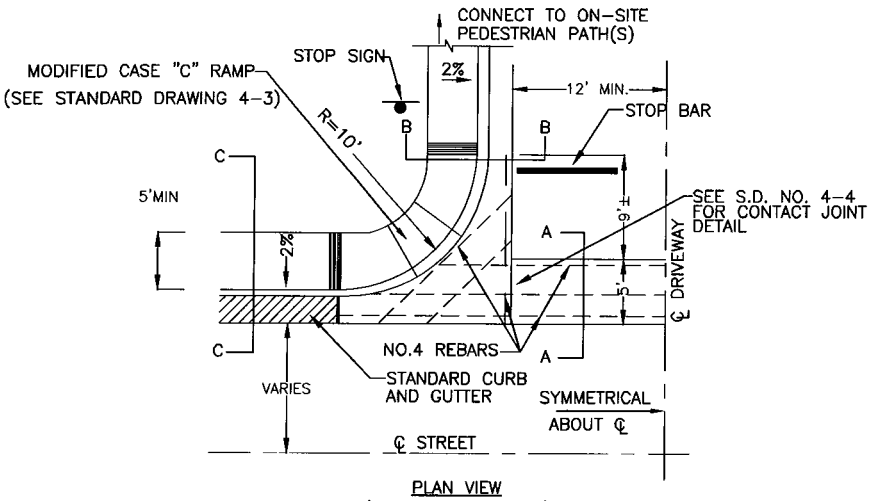

PLAN VIEW
(ADJACENT SIDEWALK)

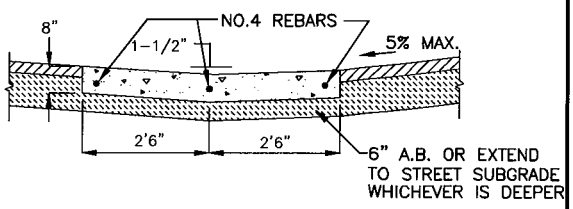

SECTION A-A

DRIVEWAY SLOPE NOT TO EXCEED 5% FOR A MINIMUM OF 20' FROM EDGE OF PAVEMENT.

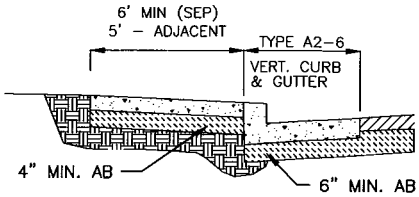

SECTION B-B

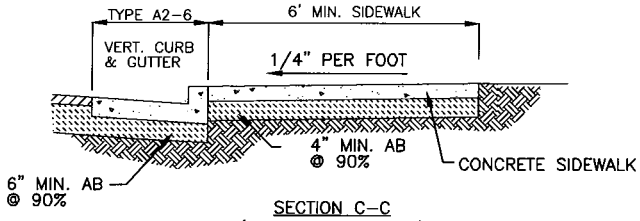

SECTION C-C
(ADJACENT SIDEWALK)

City of Winters *PUBLIC WORKS DEPARTMENT*	DATE: DEC 2015
SPECIAL COMMERCIAL FRONTAGE ENTRANCE	SHEET # 1 OF 2
CITY ENGINEER APPROVED *Nicholas J. Ponticello* P.E. NO. 49584	DRAWING #: 4-12

PLAN VIEW
(SEPARATED SIDEWALK)

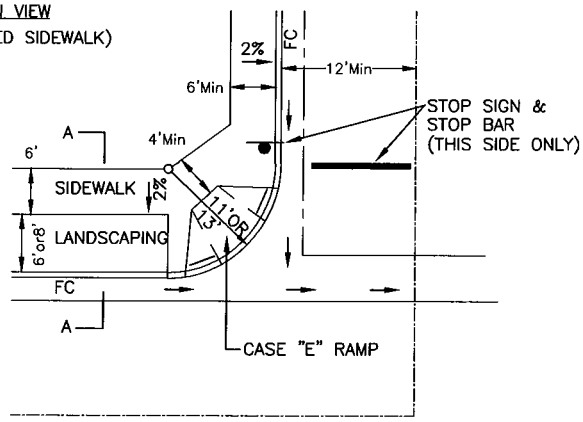

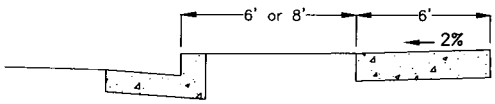

SECTION A–A
(SEPARATED SIDEWALK)

City of Winters *PUBLIC WORKS DEPARTMENT*	DATE: DEC 2015
SPECIAL COMMERCIAL FRONTAGE ENTRANCE	SHEET # 2 OF 2
CITY ENGINEER APPROVED *Nicholas J. Ponticello* P.E. NO. 49584	DRAWING #: 4–12

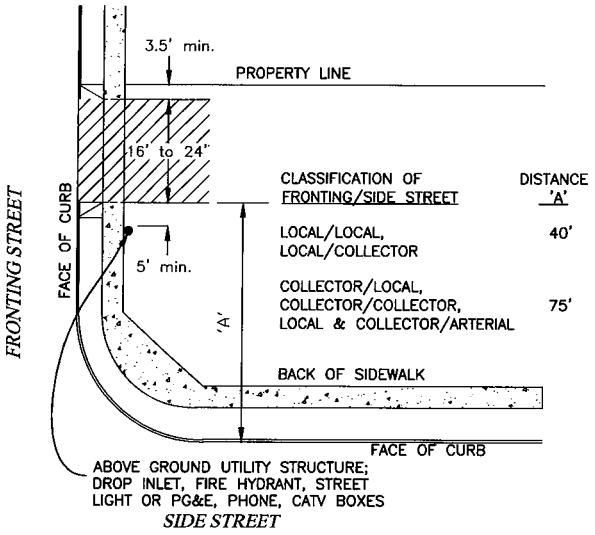

SINGLE FAMILY OR DUPLEX RESIDENTIAL

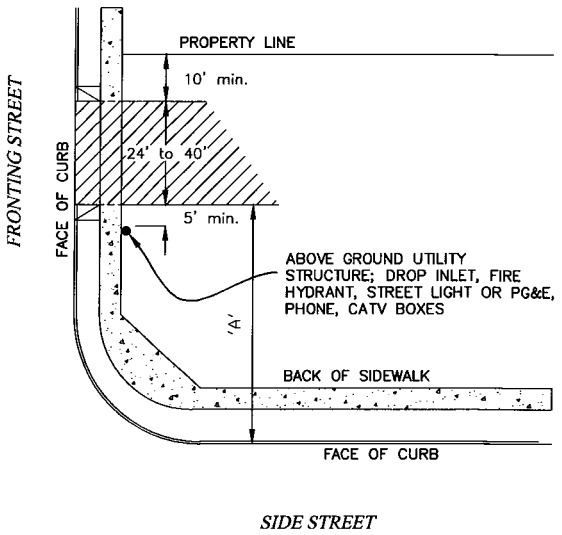

COMMERCIAL, MULTI-FAMILY, INDUSTRIAL

NOTES:

1. SEE WRITTEN TEXT (SECTION 4-9) FOR ADDITIONAL REQUIREMENTS.
2. MAXIMUM OF 2 DRIVEWAYS PER SINGLE FAMILY OR DUPLEX RESIDENTIAL TYPE UNITS.
3. DRIVEWAYS ON ARTERIAL STREETS AND COMMERCIAL, MULTI-FAMILY AND INDUSTRIAL DRIVEWAYS SUBJECT TO REVIEW AND APPROVAL OF THE CITY ENGINEER.
4. INDUSTRIAL DRIVEWAY WIDTHS MAY BE WIDER BASED ON TYPES AND QUANTITIES OF VEHICLES.
5. REQUIRED CURB RAMPS AT CORNERS NOT SHOWN.

City of Winters *PUBLIC WORKS DEPARTMENT*	DATE: DEC 2015
DRIVEWAY REQUIREMENTS AT CORNERS	SHEET # 1 OF 1
CITY ENGINEER APPROVED Nicholas J. Ponticello P.E. NO. 49584	DRAWING #: 4-13

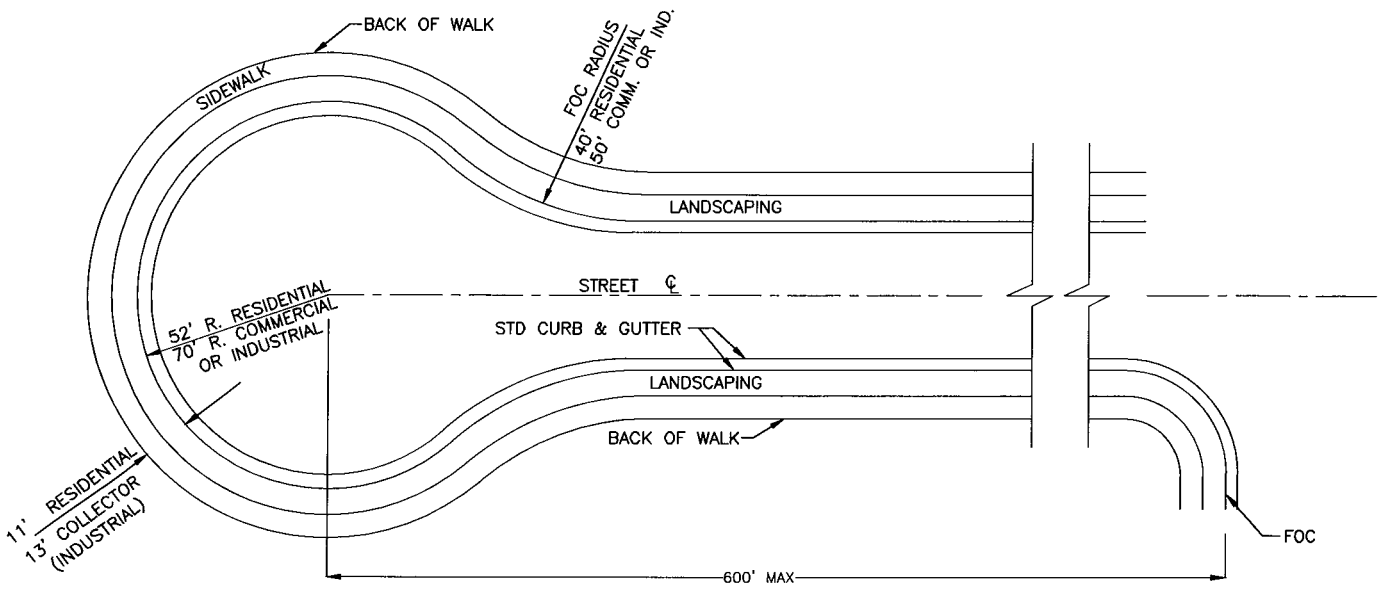

NOTES:

1. INCREASED STRUCTURAL SECTION REQUIRED IN CUL-DE-SAC BULB.

2. A STANDARD CODE W53 (NOT A THROUGH STREET) SIGN MAY BE REQUIRED AT THE ENTRANCE TO THE CUL-DE-SAC (SEE SECTION 4-25).

City of Winters *PUBLIC WORKS DEPARTMENT*	DATE: DEC 2015
CUL-DE-SAC TYPICAL DIMENSIONS	SHEET # 1 OF 1
CITY ENGINEER APPROVED Nicholas J. Ponticello P.E. NO. 49584	DRAWING #: 4-14

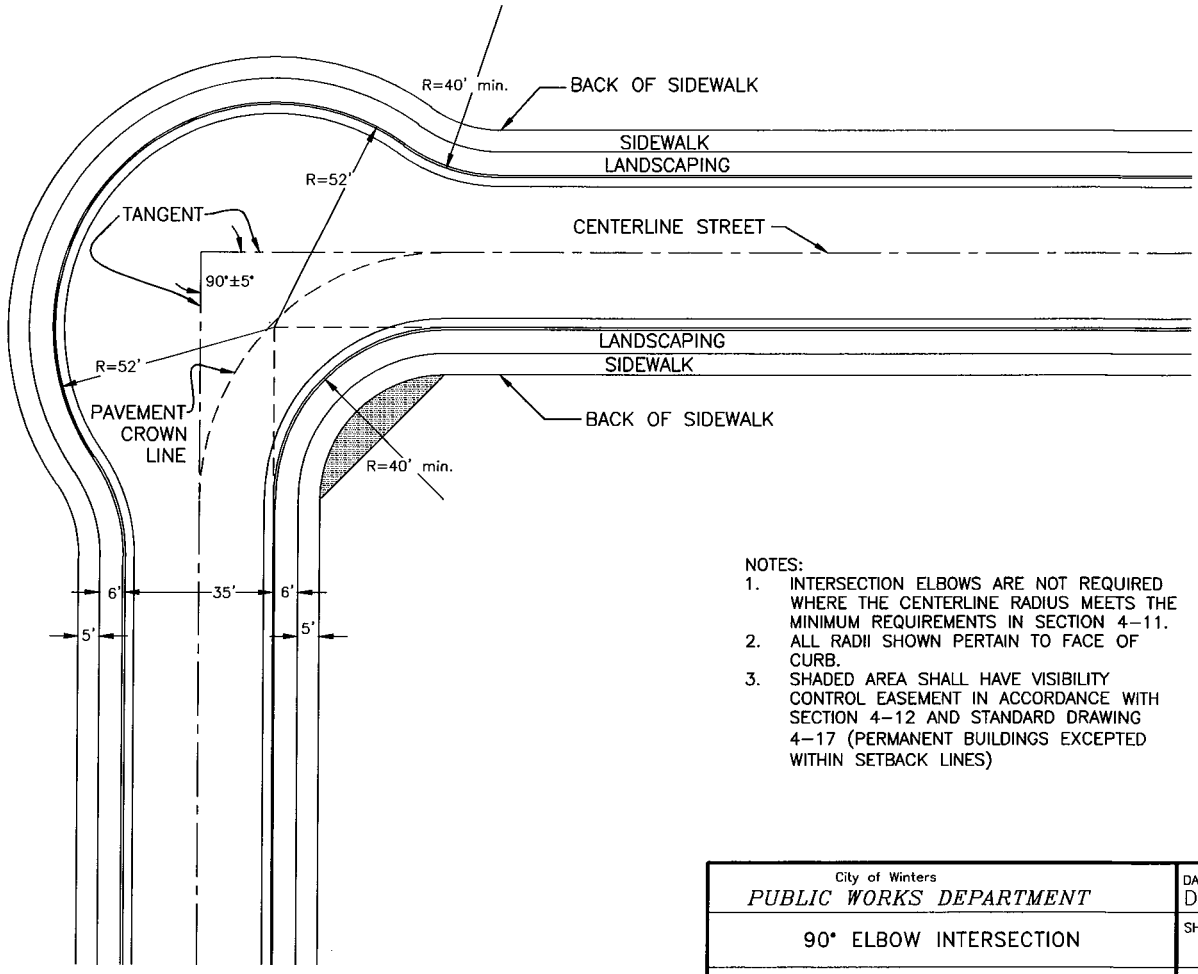

NOTES:

1. INTERSECTION ELBOWS ARE NOT REQUIRED WHERE THE CENTERLINE RADIUS MEETS THE MINIMUM REQUIREMENTS IN SECTION 4–11.
2. ALL RADII SHOWN PERTAIN TO FACE OF CURB.
3. SHADED AREA SHALL HAVE VISIBILITY CONTROL EASEMENT IN ACCORDANCE WITH SECTION 4–12 AND STANDARD DRAWING 4–17 (PERMANENT BUILDINGS EXCEPTED WITHIN SETBACK LINES)

City of Winters *PUBLIC WORKS DEPARTMENT*	DATE: DEC 2015
90° ELBOW INTERSECTION	SHEET # 1 OF 1
CITY ENGINEER APPROVED Nicholas J. Ponticello P.E. NO. 49584	DRAWING #: 4–15

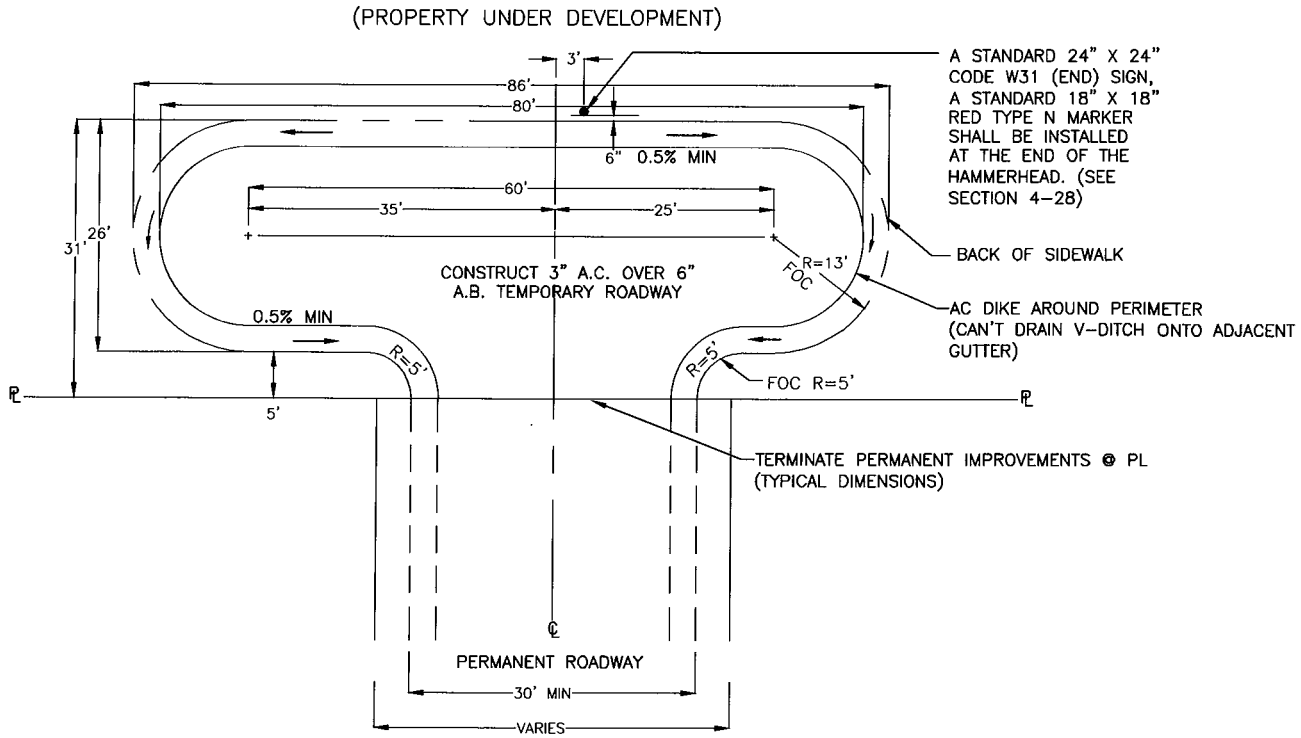

NOTES:
NO ACCESS ALLOWED OFF HAMMER-HEAD

City of Winters *PUBLIC WORKS DEPARTMENT*	DATE: DEC 2015
HAMMER-HEAD DESIGN	SHEET # 1 OF 1
CITY ENGINEER APPROVED Nicholas J. Ponticello P.E. NO. 49584	DRAWING #: 4-16

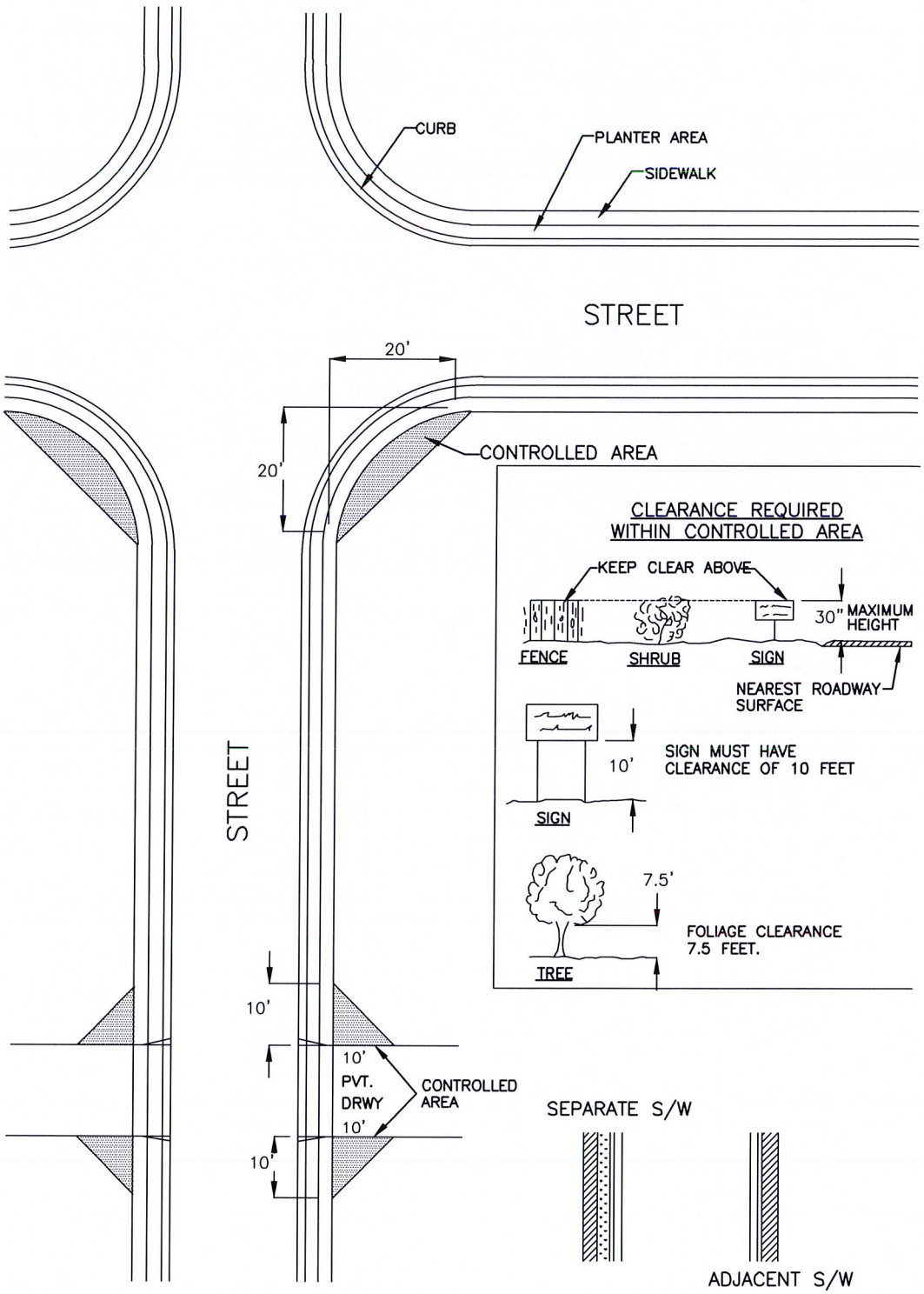

City of Winters *PUBLIC WORKS DEPARTMENT*	DATE: DEC 2015
VISIBILITY REQUIREMENT AT INTERSECTIONS AND DRIVEWAYS	SHEET # 1 OF 1
CITY ENGINEER APPROVED Nicholas J. Ponticello P.E. NO. 49584	DRAWING #: 4-17

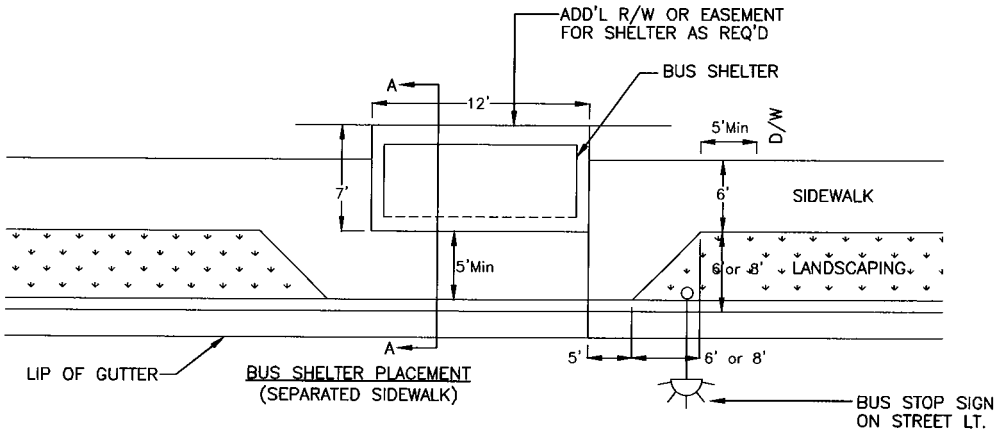

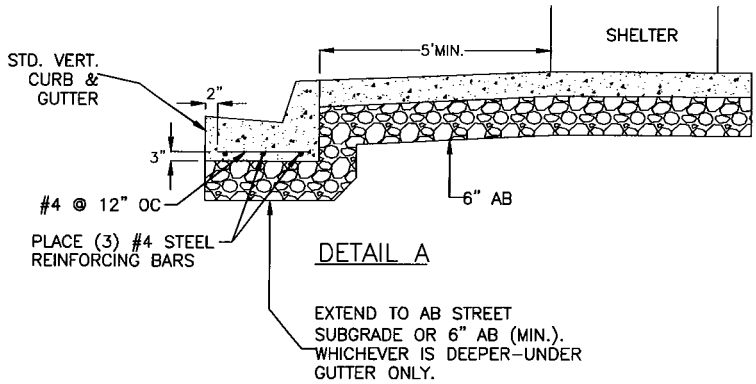

NOTES:

DETAIL 'A' SECTION SHALL BE USED FOR THE GUTTER 50 FT. EACH SIDE OF BUS STOPS WITHOUT TURNOUTS. THE REBAR SHALL BE CONTINUED ACROSS ANY DRIVEWAYS WITHIN THE 50 FT. DISTANCE FROM THE BUS STOP.

City of Winters *PUBLIC WORKS DEPARTMENT*	DATE: DEC 2015
BUS STOP	SHEET # 1 OF 3
CITY ENGINEER APPROVED Nicholas J. Ponticello P.E. NO. 49584	DRAWING #: 4-18

BUS TURNOUT AT CORNER

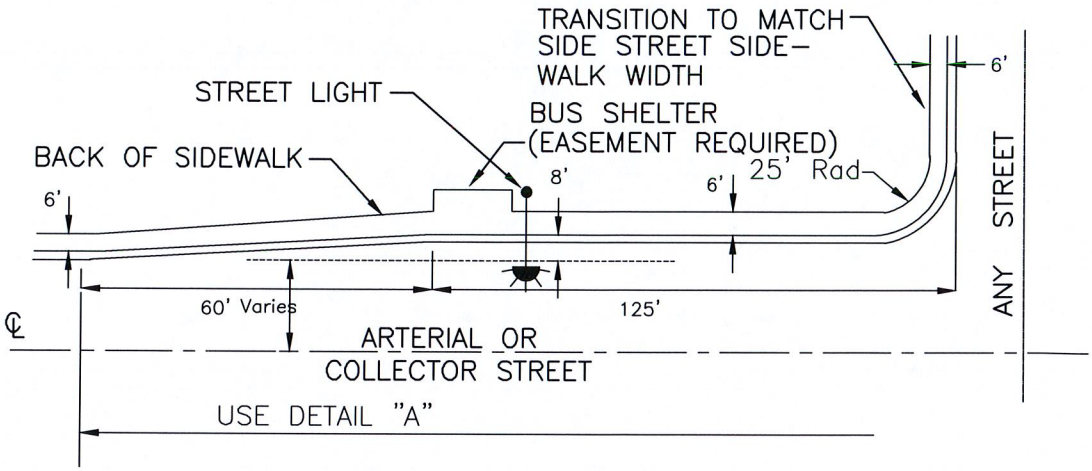

TYPICAL MID-BLOCK BUS TURNOUT

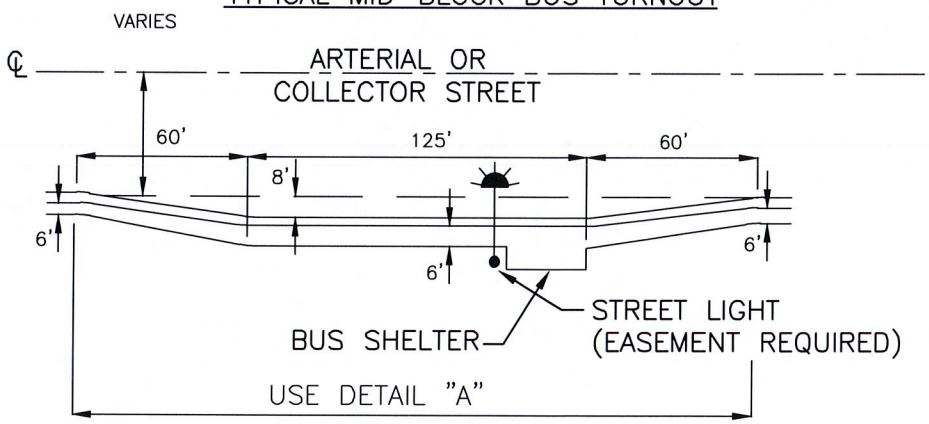

NOTES:

1. THE DIMENSIONS SHOWN ARE MINIMUM STANDARDS. THE DIRECTOR MAY DETERMINE LONGER WIDENING TO BE NECESSARY.

2. SIDEWALKS MAY BE ADJACENT TO CURB IN RETROFIT SITUATIONS ONLY. ALL NEW CONSTRUCTION REQUIRES SEPARATED SIDEWALKS PER STANDARDS.

City of Winters *PUBLIC WORKS DEPARTMENT*	DATE: DEC 2015
BUS TURNOUT	SHEET # 2 OF 3
CITY ENGINEER APPROVED *Nicholas J. Ponticello* P.E. NO. 49584	DRAWING #: 4-18

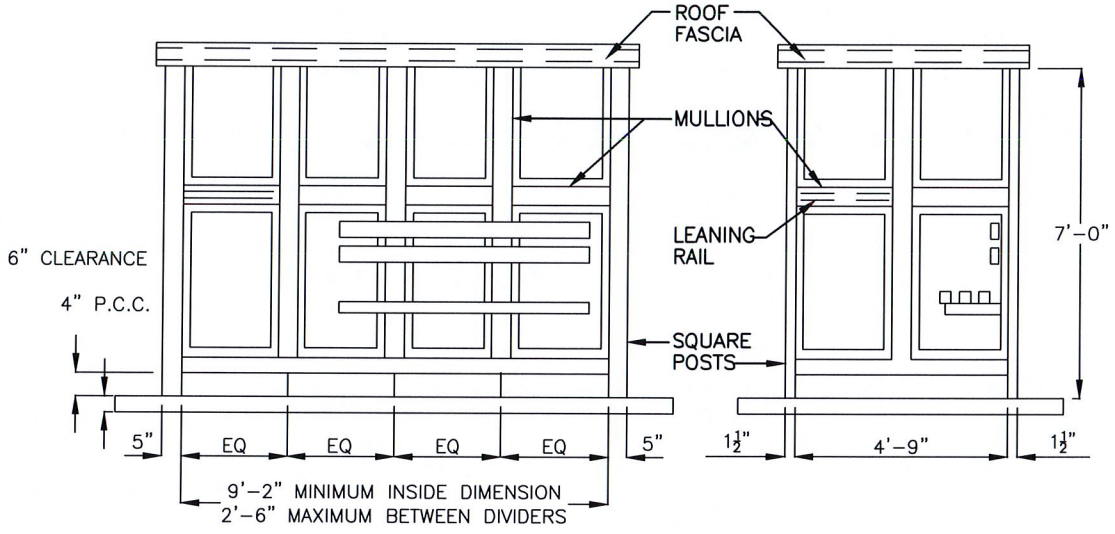

BUS SHELTER DESIGN

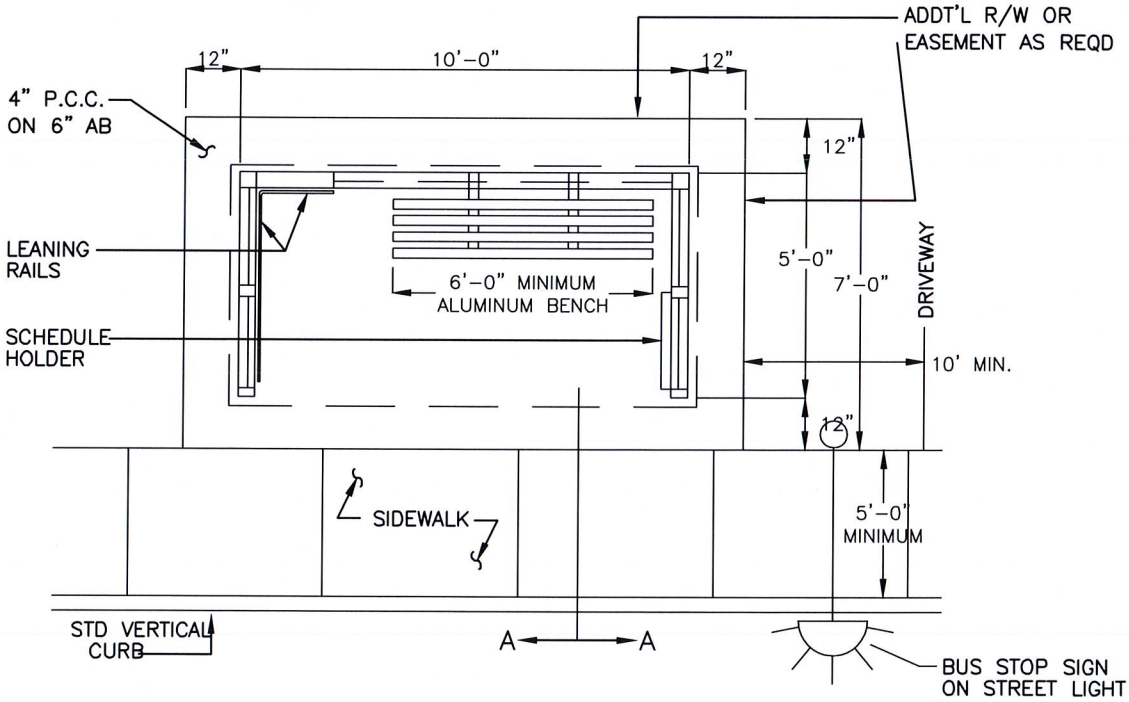

BUS SHELTER PLACEMENT
(ADJACENT SIDEWALK)

City of Winters *PUBLIC WORKS DEPARTMENT*	DATE: DEC 2015
BUS SHELTER DESIGN AND PLACEMENT	SHEET # 3 OF 3
CITY ENGINEER APPROVED *Nicholas J. Ponticello* P.E. NO. 49584	DRAWING #: 4-18

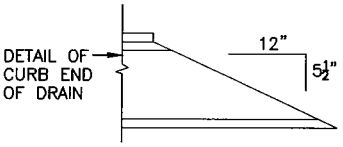

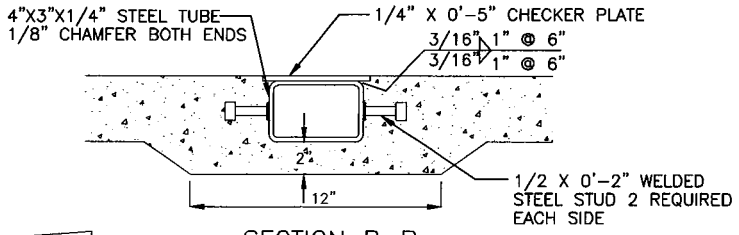

SECTION B-B

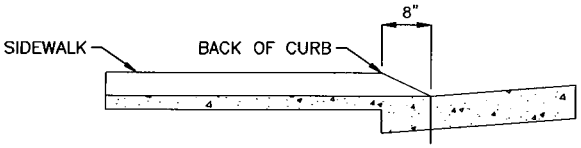

SECTION A-A
(FOR TYPE1 OR 1A CURB)

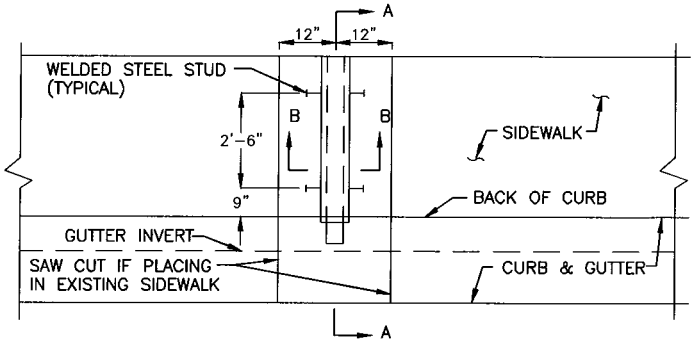

PLAN VIEW OF CURB, GUTTER & SIDEWALK

NOTES:
GALVANIZE AFTER FABRICATION

City of Winters *PUBLIC WORKS DEPARTMENT*	DATE: DEC 2015
UNDER SIDEWALK DRAIN	SHEET # 1 OF 1
CITY ENGINEER APPROVED Nicholas J. Ponticello P.E. NO. 49584	DRAWING #: 4-19

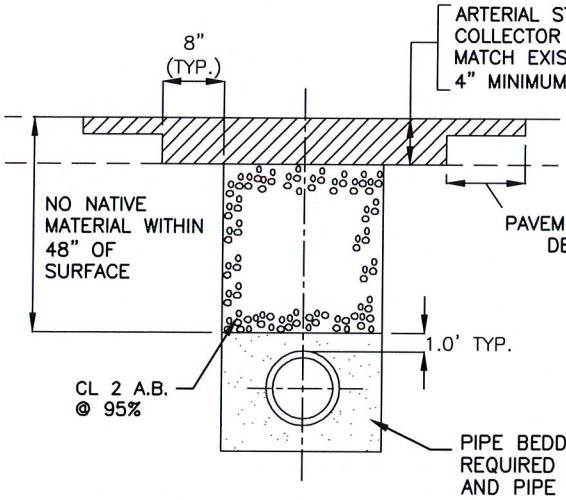

SHALLOW TRENCH (LESS THAN 4 FEET COVER) IN EXISTING %%UPAVEMENT

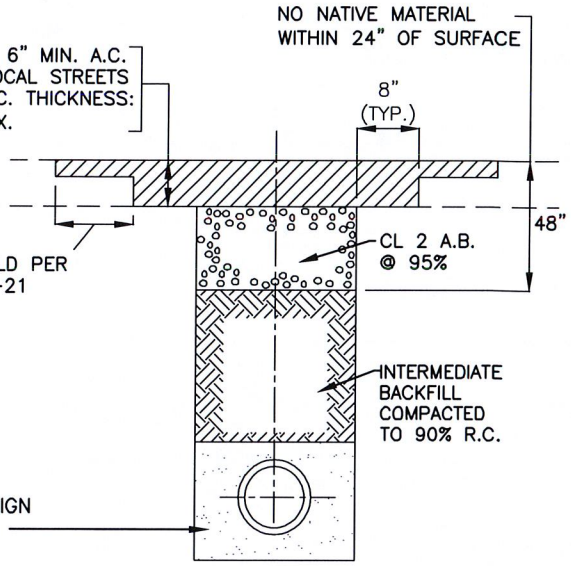

DEEP TRENCH (4 FEET OR MORE COVER) IN EXISTING PAVED AREAS AND OTHER TRENCHING

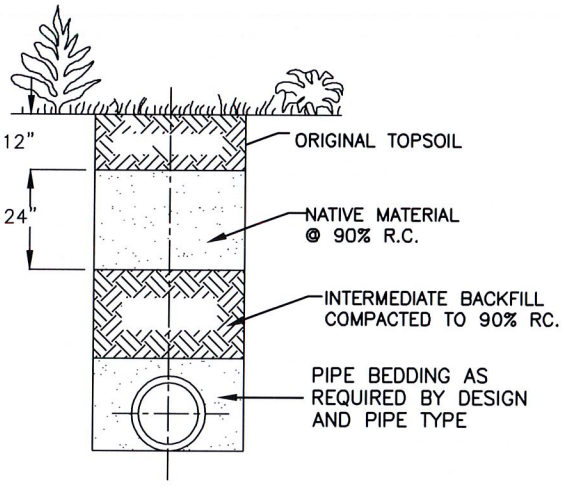

HORTICULTURE LAWN, OR CULTIVATED AREAS

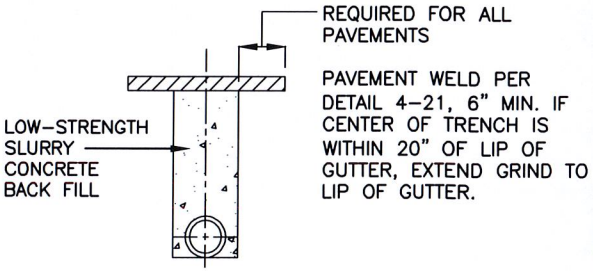

ROCK SAW TRENCH SECTION

City of Winters *PUBLIC WORKS DEPARTMENT*	DATE: DEC 2015
TRENCH SECTIONS IN IMPROVED AREAS	SHEET # 1 OF 1
CITY ENGINEER APPROVED *Nicholas J. Ponticello* P.E. NO. 49584	DRAWING #: 4-20

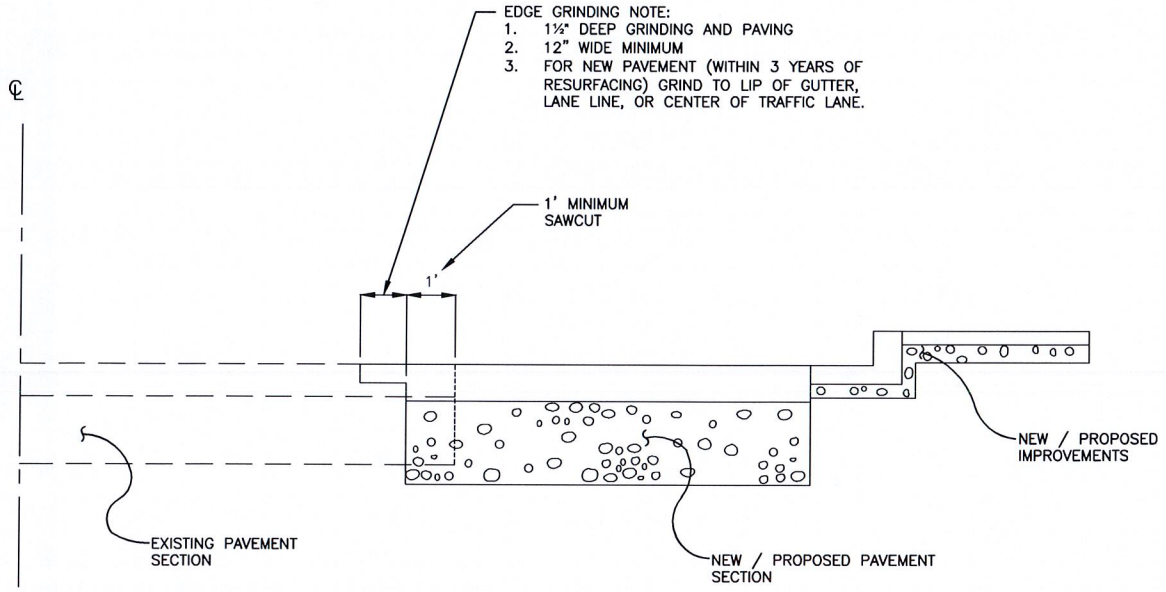

NOTES:

1. PAVEMENT WELDING BY REHEATING & BLENDING USING INDIRECT HEAT SOURCES SUCH AS INFRARED RADIANT HEATERS, MAY BE USED IN LIEU OF GRINDING PROCESS UPON APPROVAL OF EQUIPMENT BY ENGINEER.

2. GRIND TO LIP OF GUTTER, LANE LINE, OR CENTER OF TRAFFIC LANE, BUT 12" MINIMUM

City of Winters *PUBLIC WORKS DEPARTMENT*	DATE: DEC 2015
PAVEMENT WELDING DETAIL	SHEET # 1 OF 1
CITY ENGINEER APPROVED *Nicholas J. Ponticello* P.E. NO. 49584	DRAWING #: 4-21

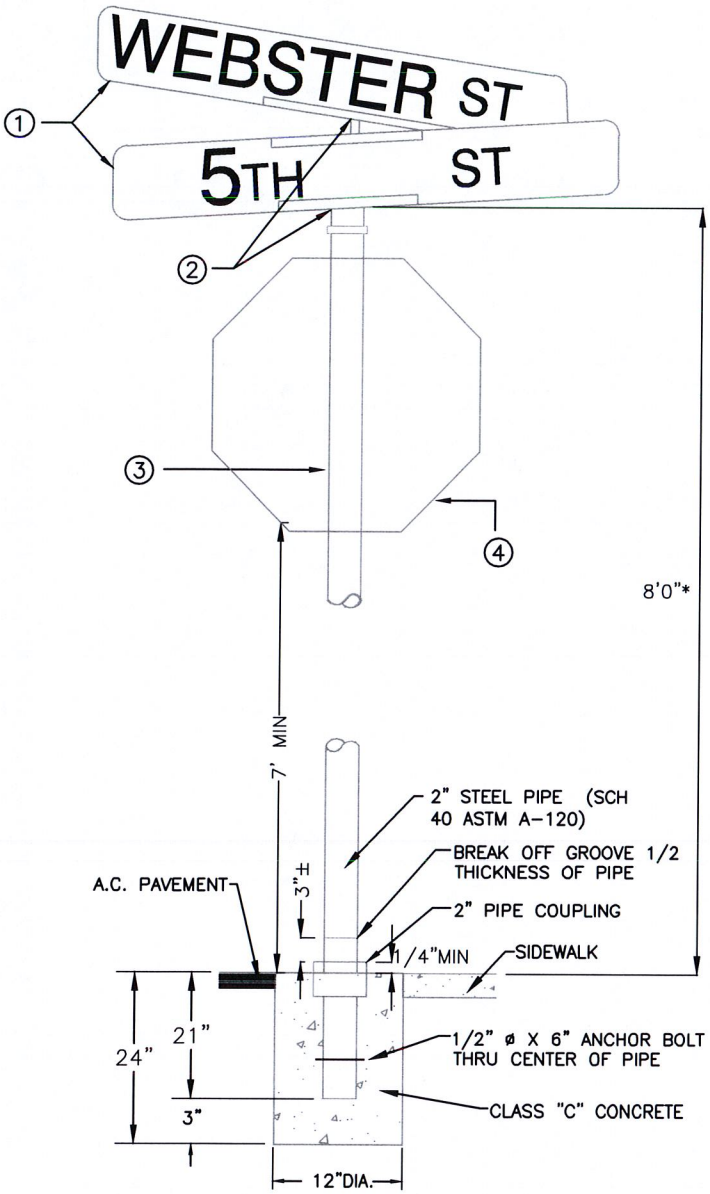

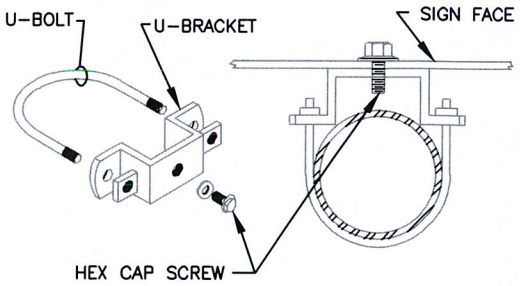

SIGN MOUNTING BRACKET
(HAWKINS MODEL M2G-C2B)

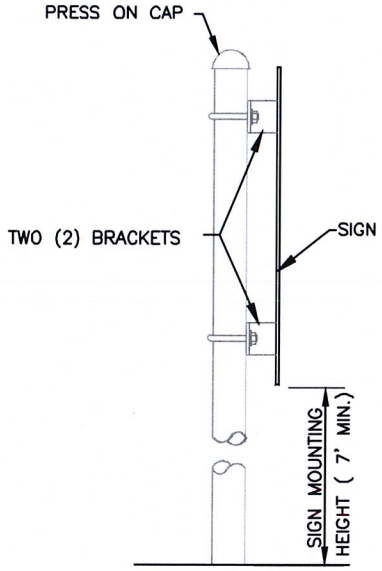

MOUNTING DETAIL

NOTES:

1. HAWKINS F.B. 118 SIGN.
2. HAWKINS, "POSITIVE LOCK" BRACKET SYSTEM V14
3. ROUND OR SQUARE POST PER TRAFFIC SIGN DETAILS
4. STOP SIGN AS REQUIRED. INCREASE POST HEIGHT TO PROVIDE INDICATED CLEARANCE.
5. ALL SIGNS AND MOUNTINGS SHALL CONFORM TO THE CALIFORNIA M.U.T.C.D., LATEST EDITION AND SUPPLEMENTS.

City of Winters *PUBLIC WORKS DEPARTMENT*	DATE: DEC 2015
STREET SIGNAGE (STEEL PIPE MOUNT)	SHEET # 1 OF 2
CITY ENGINEER APPROVED *Nicholas J. Ponticello* P.E. NO. 49584	DRAWING #: 4-22

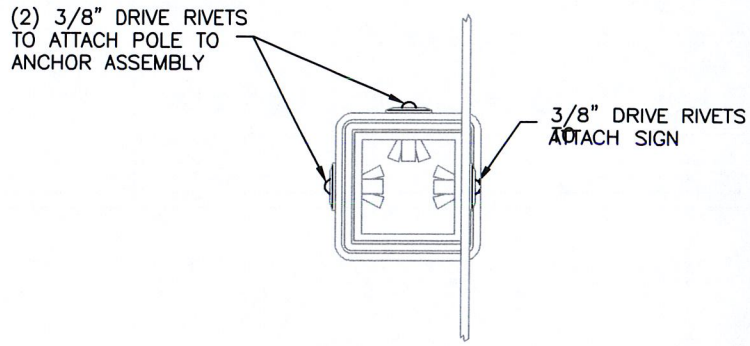

PLAN (TOP) VIEW

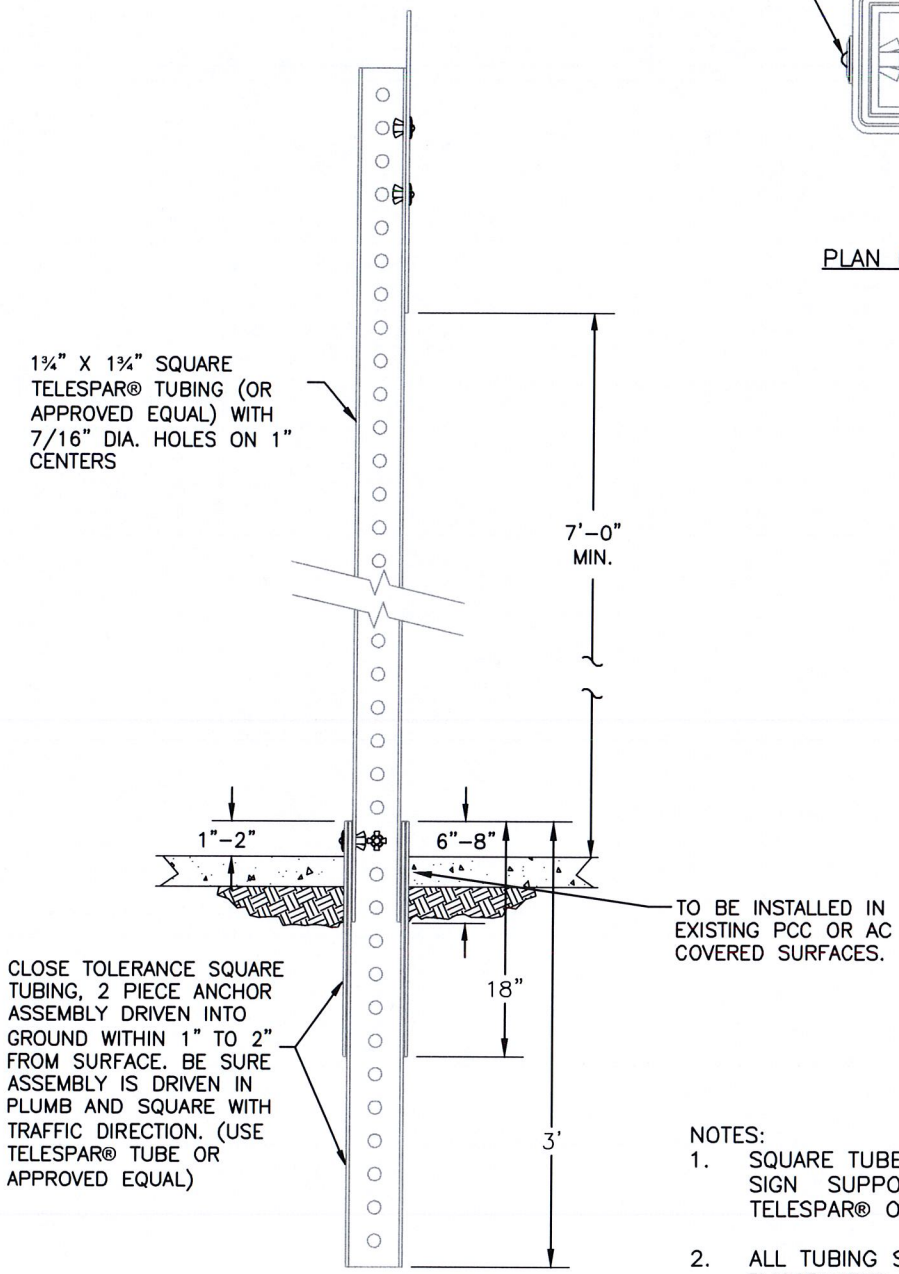

ELEVATION VIEW

NOTES:

1. SQUARE TUBE YIELDING BREAKAWAY SIGN SUPPORT SYSTEM TO BE TELESPAR® OR APPROVED EQUAL.
2. ALL TUBING SHALL BE CLEANED AND PHOSPHATED THEN COATED WITH AN ACRYLIC PAINT BY ELECTRODE DEPOSITION AND BAKED.
3. COLOR IS "PERMA-GREEN" PER FEDERAL STANDARD 595-A COLOR #14109, DARK LIMIT V-)

City of Winters *PUBLIC WORKS DEPARTMENT*	DATE: DEC 2015
STREET SIGNAGE (SQUARE TUBE MOUNT)	SHEET # 2 OF 2
CITY ENGINEER APPROVED *Nicholas J. Ponticello* P.E. NO. 49584	DRAWING #: 4-22

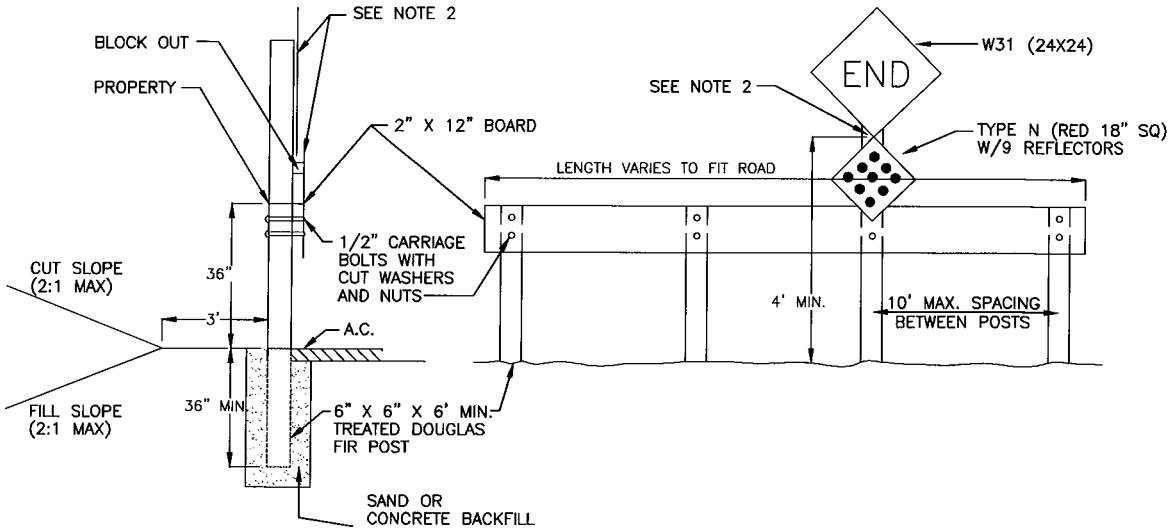

NOTES:

1. ALL EXPOSED SURFACES SHALL BE PAINTED WITH 2 COATS OF WHITE PAINT CONFORMING TO STATE STANDARD SPEC. 91-3.
2. POST AT CENTER OR NEAREST TO CENTER ON RIGHT HAND SIDE TO BE EXTENDED TO PROVIDE MOUNTING FOR SIGNS. 3. POST SHALL BE PRESSURE PRESERVATIVE TREATED PER STANDARD SPEC. 58-1.02

City of Winters *PUBLIC WORKS DEPARTMENT*	DATE: DEC 2015
SIGNS AND BARRICADES AT END OF PAVEMENT WIDENING	SHEET # 1 OF 2
CITY ENGINEER APPROVED Nicholas J. Ponticello P.E. NO. 49584	DRAWING #: 4-23

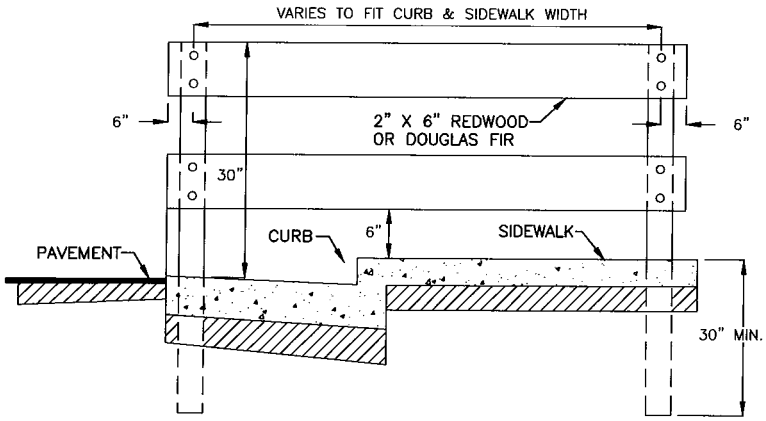

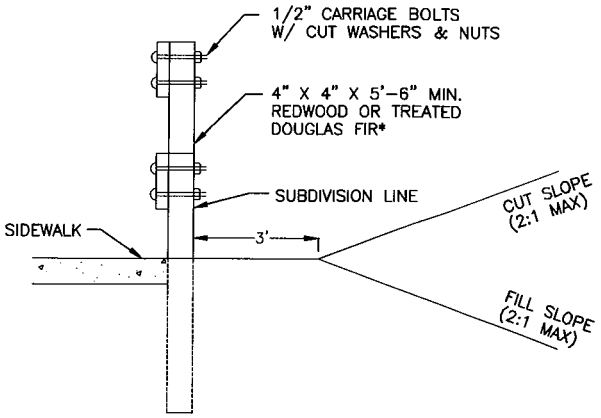

NOTES:
1. SIDEWALK BARRICADES TO BE ERECTED AT EACH LOCATION WHERE SATISFACTORY PROVISION CAN NOT BE MADE FOR PEDESTRIAN TO CONTINUE BEYOND THE TERMINUS OF A SIDEWALK.
2. ALL EXPOSED SURFACES TO BE PAINTED WITH TWO (2) COATS OF WHITE PAINT CONFORMING TO SECTION 91-3.02 OF STATE SPECIFICATIONS.

City of Winters *PUBLIC WORKS DEPARTMENT*	DATE: DEC 2015
SIDEWALK BARRICADE	SHEET # 2 OF 2
CITY ENGINEER APPROVED Nicholas J. Ponticello P.E. NO. 49584	DRAWING #: 4-23

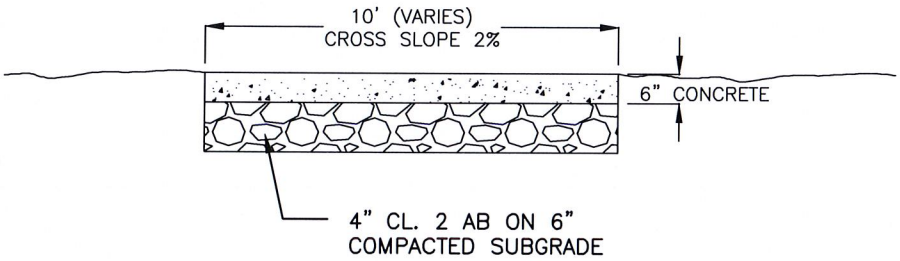

CROSS SECTION
NOT TO SCALE

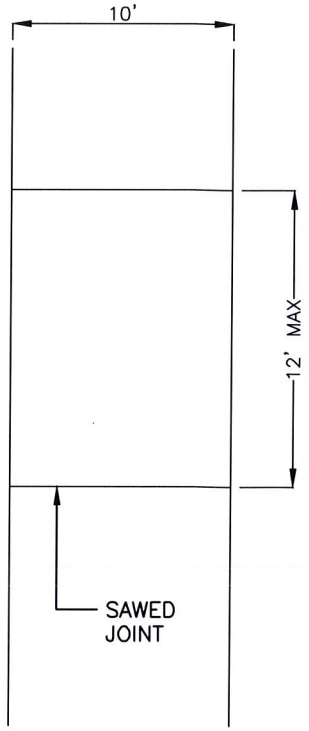

PLAN VIEW
NOT TO SCALE

NOTES:

1. CONCRETE SHALL BE CLASS "A".
2. PROVIDE SAWED TRANSVERSE JOINTS, 1" DEEP AT 12' SPACING.
3. SURFACE FINISH SHALL BE TRANSVERSE MEDIUM BROOM FINISH.
4. APPLY CURING COMPOUND PER THE STANDARD SPECIFICATIONS.

City of Winters *PUBLIC WORKS DEPARTMENT*	DATE: DEC 2015
BIKE PATH – OFF STREET	SHEET # 1 OF 1
CITY ENGINEER APPROVED *Nicholas J. Ponticello* P.E. NO. 49584	DRAWING #: 4–24

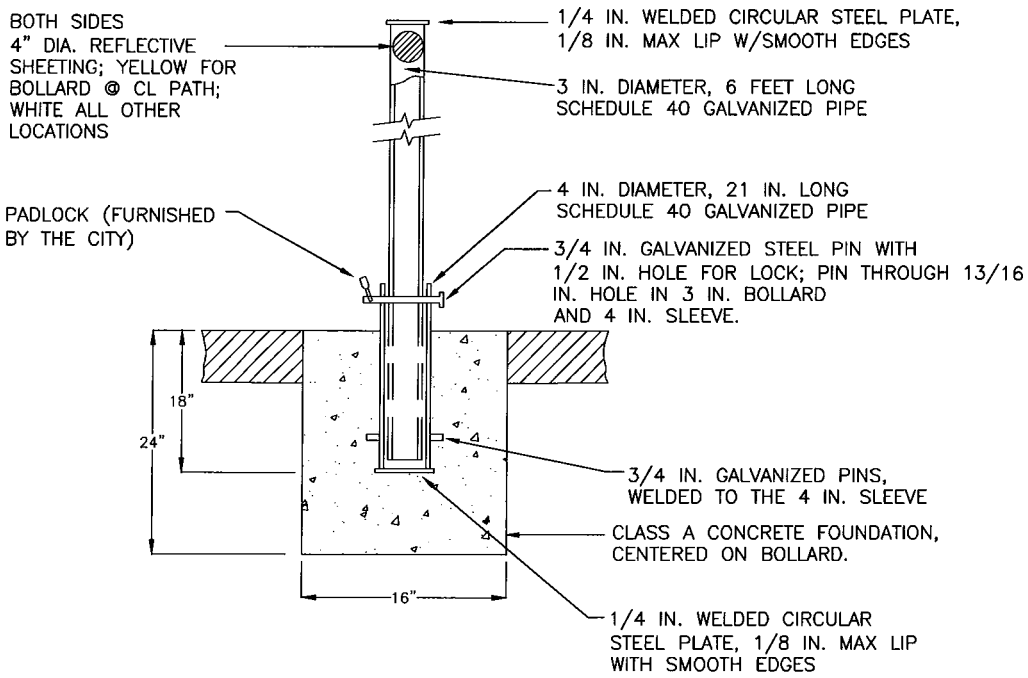

NOTES
1. BOLLARD AND SLEEVE SHALL BE SPRAY PAINTED WITH 2 COATS OF HIGH GLOSS WHITE RUST INHIBITIVE PAINT ON TOP OF 1 COAT OF PRIMER.

City of Winters *PUBLIC WORKS DEPARTMENT*	DATE: DEC 2015
REMOVABLE BOLLARD	SHEET # 1 OF 1
CITY ENGINEER APPROVED Nicholas J. Ponticello P.E. NO. 49584	DRAWING #: 4-25

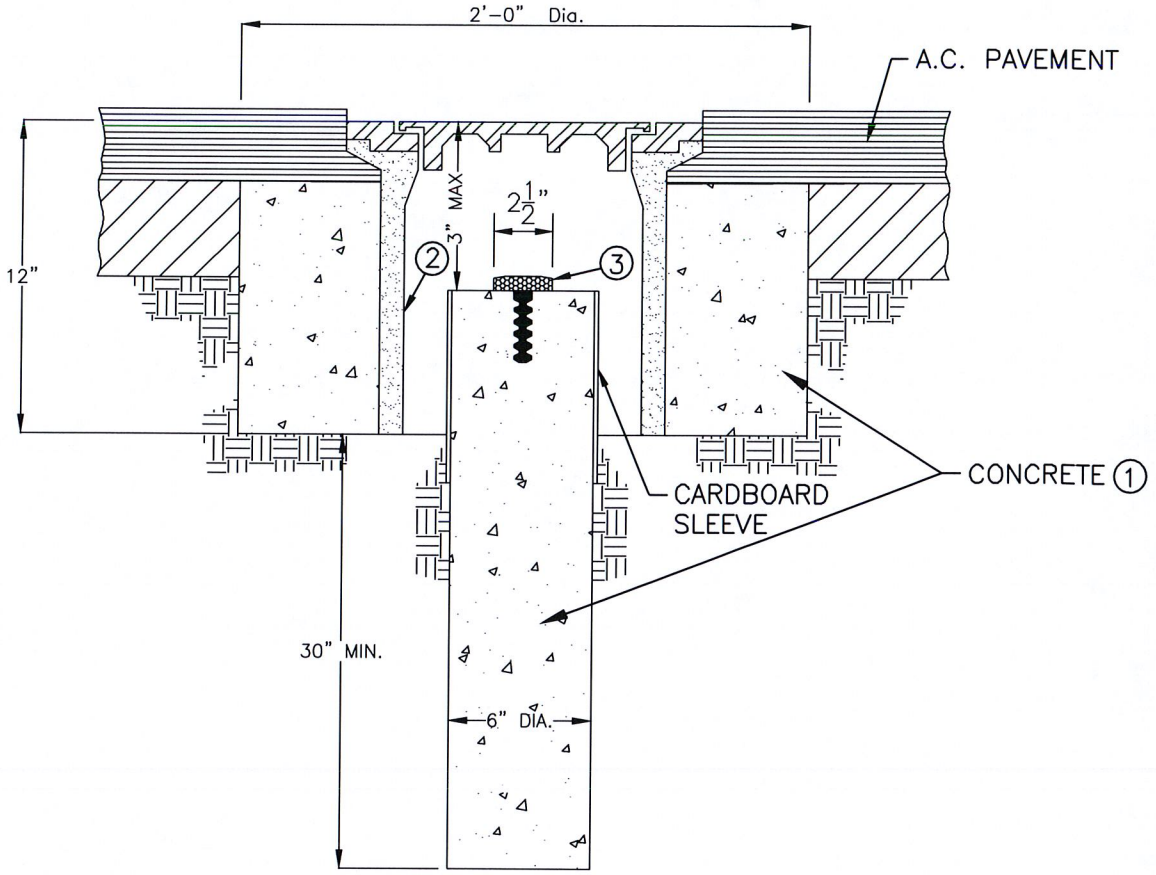

MONUMENT CROSS SECTION

NOTES:

1. CONCRETE SHALL CONFORM TO CLASS "A" PER CONSTRUCTION SPECIFICATIONS.
2. MONUMENT FRAME & COVER SHALL BE CHRISTY G5 TRAFFIC VALVE BOX OR APPROVED EQUAL. LID TO BE MARKED "MONUMENT".
3. SURVEY MARKER SHALL BE LIETZ 8134-16, SERVICE CO. 287-C OR APPROVED EQUAL.
4. THE C.E. OR L.S. NUMBER MUST APPEAR ON THE SURVEY MARKER.
5. MARK REFERENCE POINT WITH A "+" CLEARLY SCORED TO A DEPTH OF 1MM±.

City of Winters *PUBLIC WORKS DEPARTMENT*	DATE: DEC 2015
MONUMENT IN BOX	SHEET # 1 OF 1
CITY ENGINEER APPROVED *Nicholas J. Ponticello* P.E. NO. 49584	DRAWING #: 4-26

SECTION 5

STREET LIGHT DESIGN

5-1 STREET LIGHTS REQUIRED

Street lights shall be required for all public streets, lots and parcels being developed. In addition, street lights may be required for lots and parcels containing existing structures which are being improved or altered, depending on the nature and extent of the work. LED luminaires shall be installed unless HPS luminaires are allowed by the City Engineer. Illustrations of required street lights are shown on Standard Drawing 5-1.

5-2 STREET LIGHTS ON PRIVATE ROADWAYS

Street lights are required on private roadways serving more than 4 residences or serving a commercial use. For planned developments, residential, commercial, and industrial developments where the internal streets are private, a private street lighting system will be required for the internal non-dedicated streets, in addition to public street lighting provided by the developer on the external public street frontage.

5-3 DEVELOPER'S RESPONSIBILITY

All street lights will be PG&E owned and maintained via standard LS-1 rate schedule. The Developer shall coordinate with PG&E for planning, design, financing (pay all fees and costs) and operation, as required to install new streetlights.

Existing street lights which must be relocated or repositioned as a result of the construction of new streets or driveways into a development shall be the responsibility of the developer.

It shall be the responsibility of the developer to insure that the power shall remain to the existing street light system until the new street light system to replace it is completed and functioning correctly.

5-4 UTILITY COMPANY AUTHORIZATION

A written notice from the serving utility company, stating that line clearances and service has been checked and are adequate, shall be submitted to the City Engineer for all developments.

5-5 GENERAL PLAN DETAILS

For city owned lights, the plans shall show and identify all street lights to be installed, all existing lights in the immediate vicinity of the project, all conduit and conductor runs, service points, trees, and all applicable provisions and details specified in these standards. For PG&E owned lights, PG&E shall prepare the street light construction plans and show all details of construction.

On subdivision projects, a separate plan sheet shall be included for the city owned street lighting system. This plan sheet may be combined with a joint trench composite plan. Street lights (exclusive of other required information) shall also be shown on street plan and profile sheets, whether city owned or PG&E owned. In addition to the above, the following shall be required on the street light portion of subdivision plans, even though duplications may be involved:

- All details of street light construction if City owned
- A signature block conforming to Standard Drawing 3-1

- A vicinity map or equivalent
- Utility poles and public utility easements
- Names of adjacent subdivisions
- Intersecting property lines of adjacent properties
- Legend indicating electrical symbols
- A North arrow and appropriate scale (1" = 10' to 1" = 100')
- All existing street lights on both sides of any streets
- All new tree installations shall be more than 10' from street lights
- All trees within the vicinity of the conduit runs or proposed street lights.

5-6 DESIGN STANDARDS

Street lighting shall be designed in conformance with these standards and the "American National Standard Practice for Roadway Lighting" of the American National Standards Institute, except that the average horizontal maintained foot candles for the various street classifications shall be as indicated in the following table.

		Lighting Design Table							
Street Classification	**FC-FC Width**	**Type Street Light**	**Normal Mounting Height**	**LED Lamps**	**HPS Lamp**	**Distribution Type**	**Average Illuminance**	**Minimum Illuminance**	**Typ. Spacing[1]**
Units	Feet		Feet	Watts/ LEDs[5]	Watts	-	Foot-candles	Foot-candles	Feet
Local Residential	35	A or B	25	37/20	70	II mid-block III intersections	0.25	0.10	135 120
Secondary Collector	40	A	30	55/30	100	III	0.40	0.15	115
Primary Collector	50	A	30	55/30	100	III	0.40	0.15	115
Arterial (2-lane)	54	A	35	95/50	200	III	0.50	0.20	180 – 220[2]
Arterial (4-lane)	78	A	35	95/50	200	III	0.50	0.20	135 – 205[2]
Bike Path	10	B	14	37/20	70	II	0.25	0.10	115[3]
Open Space		B	14 to 20	37/20	70	III, IV or V	0.25	0.05	Note 4
	Note 1: Standard "Cobra" style with 8' mast arm. Post top style requires review of illuminance based layout. Note 2: Lights mounted back to back on single pole in median. Note 3: Standard post top style along bike paths. Note 4: Calculations to be performed by the lighting designer. Note 5: LEDs indicates the number of individual LED lights per head.								

A. Data and calculations indicating compliance shall be submitted for review or the predetermined design standards included herein shall apply. The electrical system shall be designed for 120 volts

single phase (2-wire or 3-wire). In special circumstances, the design voltage may be increased to 240 volts. Voltages higher than 240 will not be allowed. Electronic copies of light photometric distribution patterns shall be provided for any non-standard lights.

B. Lumens used to calculate the Average Illuminance shall be based on 80% of the manufacturer's value for the lamp. The luminaire depreciation factor (dirt accumulation) shall be 60%.

C. Lamps other than Light Emitting Diode or High Pressure Sodium are not allowed. HPS shall be allowed with the City Engineer's approval only.

D. Light Spacing may be adjusted ±10% to allow for driveways and other physical obstacles.

E. Open space design criteria shall be reviewed and approved by the City Engineer on a case by case basis.

5-7 STREET LIGHT DESIGN DETAILS

Design details for street lights are as follows:

A. Intersections - Intersections shall have at least one street light. Intersection street light locations and the number required shall conform to Standard Drawings 5-2 and 5-3.

B. Cul-de-sacs - All cul-de-sacs exceeding 130 feet in length, measured from the street light location at the intersection to the right-of-way line at the end of the cul-de-sac, shall have a street light within the bulb. The location of the street light within the bulb shall conform to Standard Drawing 5-3.

C. Bike Paths — Street lights shall be placed at both ends of pedestrian lanes.

D. Spacing — The maximum street light spacing, measured along the street centerline, shall conform to the above table. Street lights on arterial streets shall be staggered. Double median poles will be considered on a case by case basis and require special approval.

E. Street Light Poles — All street light poles shall be of galvanized steel, aluminum or concrete. Poles shall be identified on the plans or in the special provisions. Identification information shall include material type, bolt circle diameter, luminaire mounting height, pole dimensions and length of mast arm.

The City Engineer may approve special or unusual designs if warranted by the character of the surrounding neighborhood. Where special or unusual design street light poles are not listed in the Standard Specifications, the developer shall supply additional poles to the City for future pole replacement. The minimum number of replacement poles to be supplied to the City shall be 10% of the poles being installed with any fractional percent rounded up to the next whole number.

The position of the street light poles relative to sidewalk shall conform to Standard Drawing 5-4.

F. Street Lights on Existing Utility-Owned Poles — When there are permanent existing utility owned poles with existing street lights adjacent to the project, the existing street lights shall be replaced with city owned street lights in accordance with these standards. The Developer shall make all arrangements with the owning utility for disconnection and removal of the existing pole mounted street light.

G. Luminaires and Ballasts

1. Luminaires shall be either light emitting diode type. High pressure sodium luminaires may be allowed with approve by the City Engineer.

a. Light Emitting Diode (LED): LED luminaries shall be light distribution ANSI Type II or III per these design standards. Correlated Color Temperature shall be appropriate for the application and shall be shown on the plans.

b. High Pressure Sodium (HPS): HPS luminaires shall include an internal ballast. The type of street light and the appropriate wattage shall be specified on the plans. All luminaires shall conform to the standards outlined in the Standard Specifications; light distribution shall be ANSI type II or III per these design standards and shall be full cut-off type unless specified otherwise by the Engineer. The light pattern for each luminaire shall be specified on the plans. Ballasts shall conform to the standards outlined in the Standard Specifications, except that for 100-watt high pressure sodium luminaires the ballast shall be energy efficient.

H. Service — All street light systems shall have underground service provided. Service points shall be provided within a utility easement immediately adjacent to or within the right-of-way and shall be open and easily accessible to the street frontage. Types of service are as follows:

1. The City Engineer may approve overhead service in unusual areas where there is reason to believe it cannot be provided underground. The developer's consultant shall be responsible for all electrical details and modifications to the standards relating to overhead service.

2. A direct underground service consists of one light being served from a single service point. Whenever possible, new lights on developments adjacent to existing development shall connect to an existing service point. The service point may be in the form of a pullbox or a service pedestal installed by the developer. See Standard Drawing 5-5 for design details.

3. Multiple service is two or more lights being served from a single service point installed by the developer. The service point shall be a pullbox. Multiple systems shall have a service pedestal normally located adjacent to the PG&E service point. The service pedestal shall be a Caltrans Type III-AF.

I. Pullboxes — All pullboxes, including the size, shall be shown and identified on the plans. Pullboxes shall be installed adjacent to all street lights, at junction points of conduit runs, and when distance between pull boxes exceeds 200 feet long. The standard pull box shall be a Caltrans #3½.

J. Conductors — All conductors, including quantity and size, shall be identified on the plans. Unless otherwise specified, conductors shall be single conductor, solid or stranded copper, sized in accordance with these standards and the National Electrical Code.

1. On a direct underground service, the minimum conductor shall be No. 8 A.W.G. In general, conductors larger than No. 2 A.W.G. will not be allowed.

2. On multiple service, the minimum conductor size from the service point to the service can shall be No. 8 A.W.G.

3. The size of each conductor from the service point to the luminaires shall be such that the voltage drop along each circuit will not exceed 7% for 2-wire systems and 6% for 3-wire systems of the nominal service voltage to the farthest luminaire. The nominal service voltage to be used in the voltage drop calculations shall be 115 volts. Calculations shall be submitted substantiating the design criteria for every circuit, including the total load in amperes of each circuit at the service can. See Standard Drawing 5-8 for typical calculations.

4. The lamp amperage (or power demand) shall be based on total lamp wattage, including any losses in the ballast or other electrical components of the luminaire.

5. Where only one photo cell is required in a multiple service system, it shall be connected to the service can with three No. 14 A.W.G. conductors.

K. Photo Cell - A single photo cell receptacle shall be provided on the luminaire nearest to the service point for multiple service containing four or more lights. All other light systems shall have a photo cell in each luminaire.

L. Conduit — All conduit runs, including the size, shall be shown and identified on the plans. The conduit size shall be determined using Standard Drawing 5-9 as a guideline, with the minimum size being one-and-one-half-inch (1½") diameter conduit. Minimum cover shall be 24 inches to finished ground in landscaped areas and 30 inches in roadway areas.

Only 2 circuits (one set of 3 wires) shall be allowed in any conduit. All circuits may, however, be mixed in the same conduit from the service can to the first pull box.

The design may include more than two circuits in a conduit if the conductors for each set of circuits are identified by conductor insulation which is a solid color or a basic color with a permanent colored stripe. The identification stripe shall be continuous over the entire length of the conductor.

New development shall install one-and-one-half-inch (1½") conduit, or larger as required, with one No. 10 A.W.G. stranded pullwire from the last light on each end of the system to the adjacent property line, where the adjacent property has no existing street lighting system.

M. Electrical Equipment and Work — Control and switching equipment and fusing of all circuits shall meet the requirements of the National Electrical Code, the Basic Electrical Regulations, Title 24, Part 3, of the California Administrative Code, the rules of the National Board of Fire Underwriters, and the City of Winters.

5-8 MASTER PLANNING

Master planning is the determination of street light locations between control points. Control points are proposed street light locations at street intersections in accordance with the above sections and Standard Drawings 5-2 and 5-3, and existing street lights. The purpose of master planning is to establish an overall uniform street light system meeting minimum requirements. Master planning shall apply to both sides of the street. The procedure is outlined as follows:

A. Identify the nearest intersections each way from the street light locations being planned. Determine the location of the street lights at the intersections in conformance with the design standards in the above sections.

B. Identify any existing street lights situated between the intersections.

C. Determine the distance between the adjacent designed intersection street lights and/or adjacent existing street lights, whichever are nearest to the street light locations being planned.

D. Divide the distance into equal spaces between lights not to exceed the maximum spacing requirements specified in the above sections.

E. Compare the light locations to intersecting property lines, driveways, pedestrian lanes, and other obstructions as follows:

1. If the location falls close to a property line and it can be adjusted to the property line while staying within the maximum spacing allowed, then the adjustment should be made.

2. Generally, street lights should be situated at intersecting property lines for residential lots and parcels with minimal frontage (75 feet or less). The light spacing may have to be

unbalanced, with additional lights being added to attain this and still comply with the maximum spacing allowed.

3. Street light locations shall be adjusted to miss driveways, existing utility poles, and other obstructions by five feet.

F. Street light locations on arterial streets should be adjusted, when possible, to obtain a more uniform light distribution if there are existing street lights on the opposite side of the street.

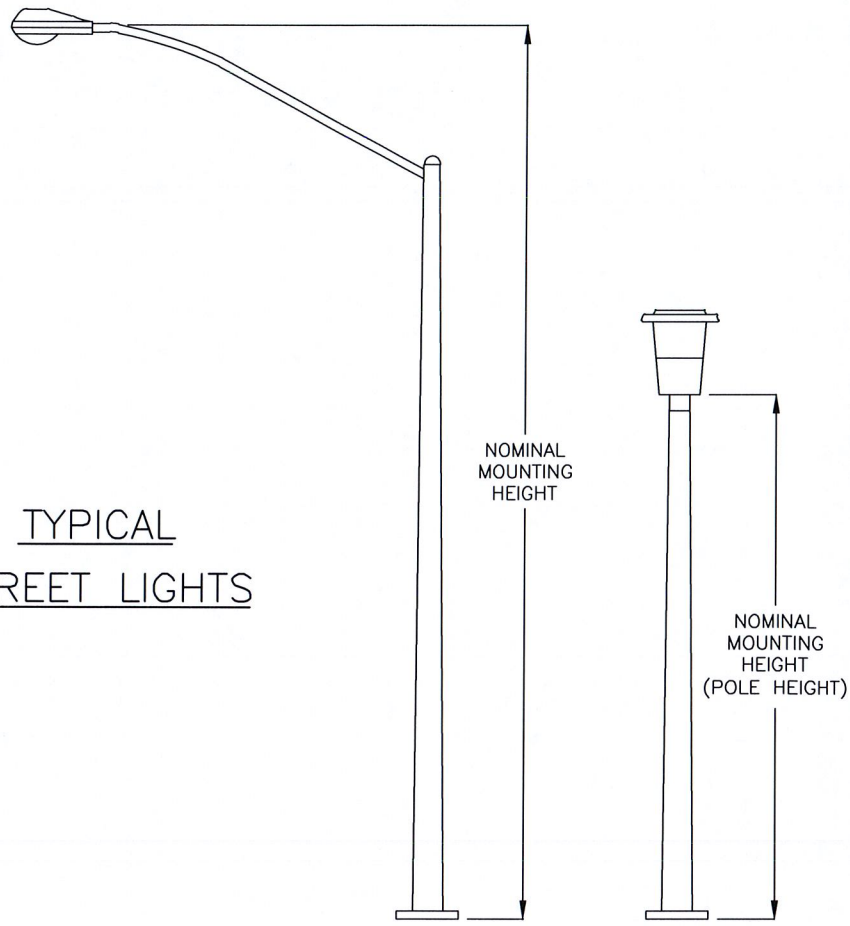

TYPICAL STREET LIGHTS

EXISTING

PROPOSED	EXISTING		STD COBRA	STD "POST TOP"
		TYPE "A"	CALTRANS STD TYPE 15 OR 21 (W/O SLIP BASE INSERT)	UTILITY STANDARD ON CONCRETE FOUNDATION
		TYPE "B"	OR	
		PULLBOX	UTILITY STD POLE ON CONCRETE FOUNDATION	
		CONDUIT		
		SERVICE CAN		
		U.G. UTILITY SERVICE PEDESTAL		
		TRANSFORMER		
		WOOD POLE		

City of Winters *PUBLIC WORKS DEPARTMENT*	DATE: DEC 2015
STREET LIGHTING POLES AND SYMBOLS	SHEET # 1 OF 1
CITY ENGINEER APPROVED Nicholas J. Ponticello P.E. NO. 49584	DRAWING #: 5-1

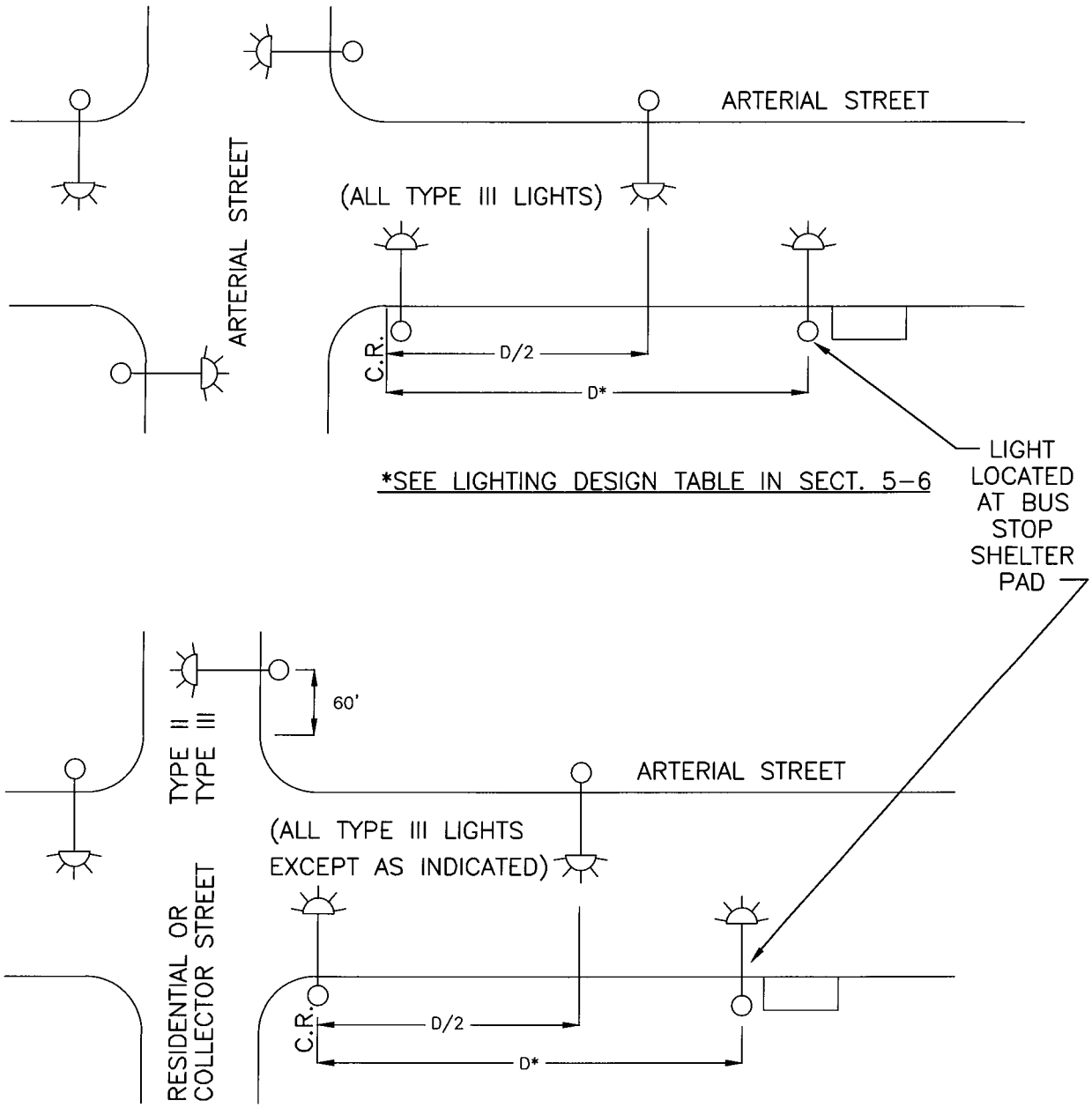

City of Winters *PUBLIC WORKS DEPARTMENT*	DATE: DEC 2015
TYPICAL STREET LIGHT LOCATIONS ARTERIAL STREETS	SHEET # 1 OF 1
CITY ENGINEER APPROVED Nicholas J. Ponticello P.E. NO. 49584	DRAWING #: 5-2

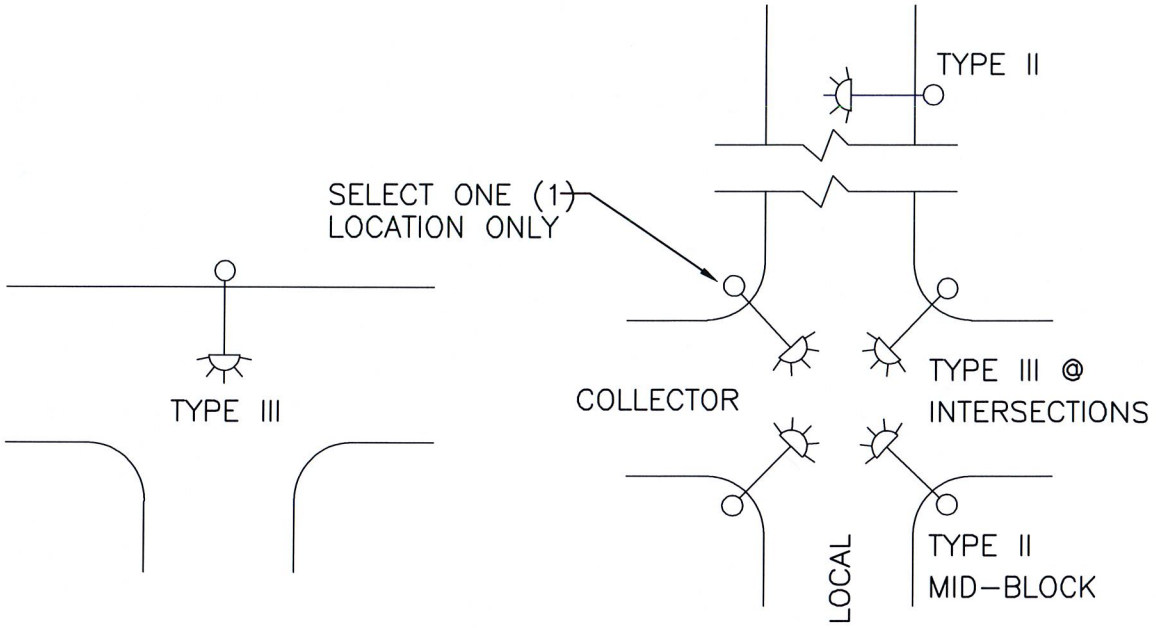

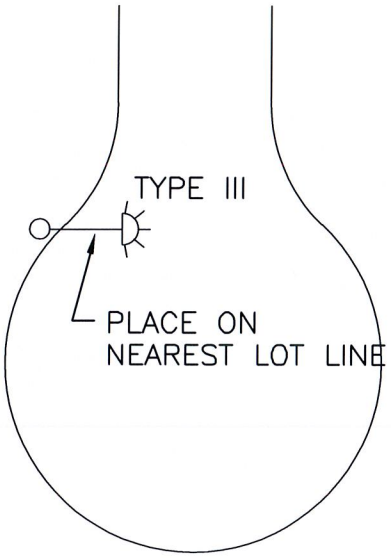

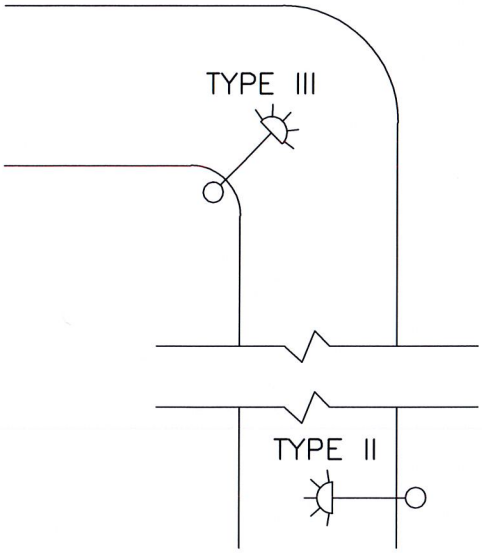

City of Winters *PUBLIC WORKS DEPARTMENT*	DATE: DEC 2015
TYPICAL STREET LIGHT LOCATIONS COLLECTOR AND RESIDENTIAL STREETS	SHEET # 1 OF 1
CITY ENGINEER APPROVED Nicholas J. Ponticello P.E. NO. 49584	DRAWING #: 5-3

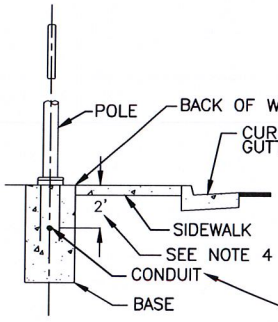

4' TO 6' SIDEWALK

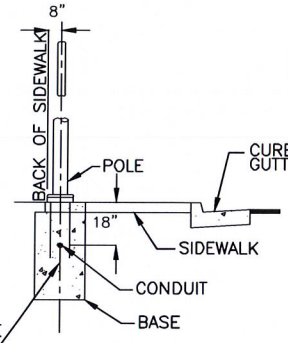

OVER 6' SIDEWALK

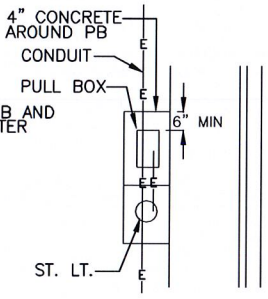

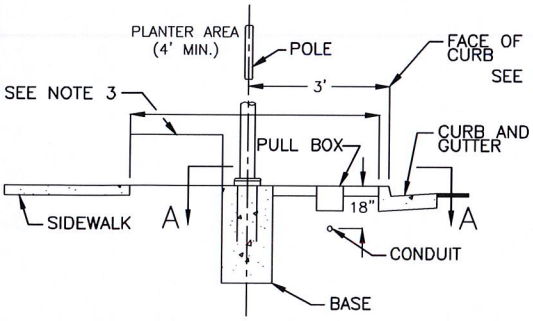

SIDEWALK WITH PLANTER AREA

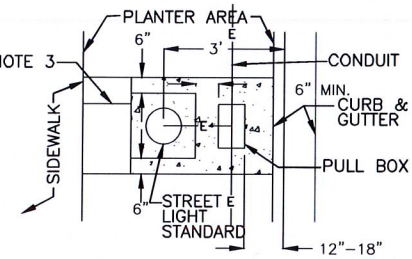

SECTION A-A

NOTES:

1. CONDUIT TRENCH BACKFILL SHALL BE COMPACTED TO 90% RELATIVE COMPACTION WHEN BEHIND THE CURB.
2. LANDSCAPING IN THE AREA OF THE STREET LIGHT STANDARD WILL MATCH BASE ELEVATION AND HAVE A MINIMUM OF 12" OF CLEARANCE FROM THE BASE.
3. IF THIS LENGTH IS 12" OR LESS, PLACE 3-1/2" THICK PCC CONCRETE FROM STREET LIGHT BASE TO FACE OF SIDEWALK. WIDTH TO MATCH CONCRETE AROUND STREET LIGHT FOUNDATION.
4. IF CONDUIT IS LOCATED BENEATH THE SIDEWALK, IT MAY BE PLACED AT 18" DEPTH INSTEAD OF 2'.
5. PB MAY BE OMITTED IF SERVICE PT IS WITHIN 50' OF LIGHT.

City of Winters *PUBLIC WORKS DEPARTMENT*	DATE: DEC 2015
STREET LIGHT BASE DETAIL POST, CONDUIT & PULL BOX PLACEMENT FOR LIGHTING AND ELECTRICAL SYSTEMS	SHEET # 1 OF 1
CITY ENGINEER APPROVED Nicholas J. Ponticello P.E. NO. 49584	DRAWING #: 5-4

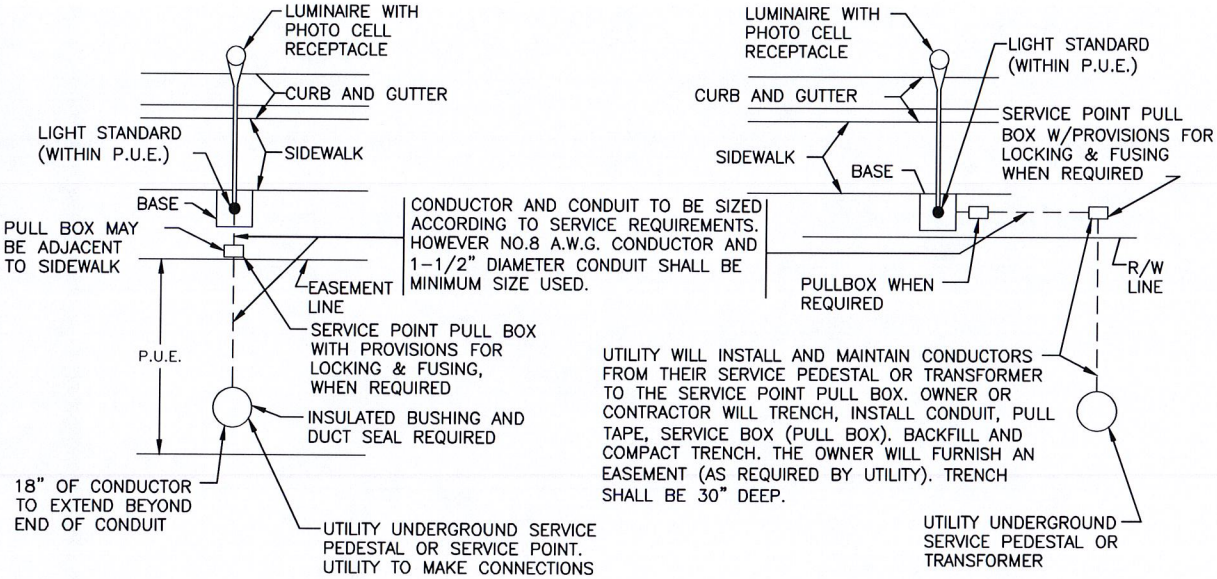

RESIDENTIAL SERVICE

COMMERCIAL SERVICE

NOTES:

1. CONNECT NEUTRAL CONDUCTOR TO GROUNDING ELECTRODE IN SERVICE POINT PULL BOX.
2. ALL FACILITIES SHALL BE WITHIN RIGHT-OF-WAY OR PUBLIC UTILITY EASEMENT.
3. CONDUIT TO TERMINATE 2" BELOW BOTTOM OF HANDHOLE.
4. SEE SHEET 5-20 AND 5-12 FOR STREET LIGHT SERVICE POINT PULL BOX DETAILS.
5. THIS DETAIL IS FOR CITY OWNED LIGHTING SYSTEMS AND DOES NOT APPLY TO UTILITY OWNED SYSTEMS.

City of Winters *PUBLIC WORKS DEPARTMENT*	DATE: DEC 2015
SINGLE LIGHT DIRECT SERVICE	SHEET # 1 OF 1
CITY ENGINEER APPROVED Nicholas J. Ponticello P.E. NO. 49584	DRAWING #: 5-5

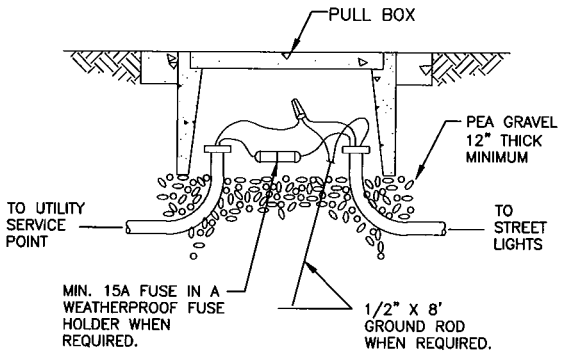

SERVICE POINT PULL BOX DETAILS

LAMP WATTAGE	FUSE SIZE
200 WATT OR LESS	6 AMP
250 WATT–400 WATT	10 AMP

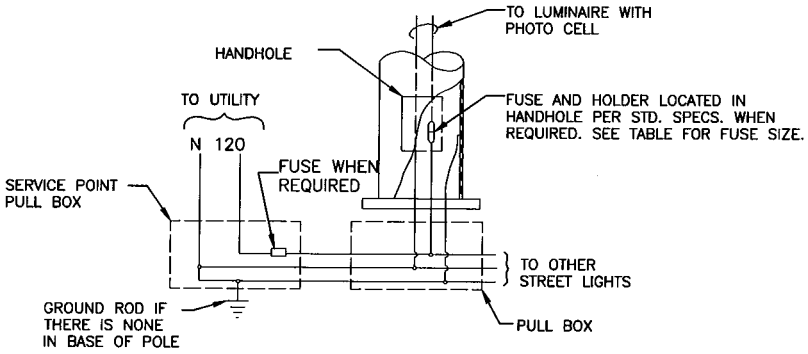

WIRING DIAGRAM

NOTES:
1. FUSE SHALL BE A MIDGET FERRULE TYPE. RATED AT 600 VOLTS.
2. ATTACH GROUND CONDUCTOR TO EACH ELECTROLIER.
3. ALL PULL BOXES SHALL HAVE PROVISIONS FOR LOCKING.
4. THIS DETAIL APPLIES TO CITY OWNED SYSTEMS ONLY.

City of Winters *PUBLIC WORKS DEPARTMENT*	DATE: DEC 2015
SERVICE POINT PULL BOX	SHEET # 1 OF 1
CITY ENGINEER APPROVED Nicholas J. Ponticello P.E. NO. 49584	DRAWING #: 5–6

TYPICAL VOLTAGE DROP CALCULATION FOR 3-WIRE SYSTEM

$$\text{VOLTAGE DROP (COPPER CONDUCTOR)} = \frac{D \times A \times N \times 11}{\text{CIRCULAR MILS}}$$

D = LENGTH OF SECTION, IN FEET.

A = LINE OPERATING AMPERES DRAWN BY ONE LIGHT.

N = NUMBER OF LIGHTS IN THE CIRCUIT BEYOND THE SECTION.

SIZE WIRE	AREA (CIRCULAR MILS)
14	4,110
12	6,530
10	10,380
8	16,510
6	26,250
4	41,740

LINE OPERATING AMPERES FOR HIGH PRESSURE SODIUM LUMINAIRES	
100 WATTS (ENERGY EFFICIENT)	..... 1.10 AMPS
100 WATTS	..... 1.25 AMPS
150 WATTS	..... 1.80 AMPS
200 WATTS	..... 2.35 AMPS
250 WATTS	..... 2.90 AMPS

TYPICAL MULTIPLE STREET LIGHTING SYSTEM

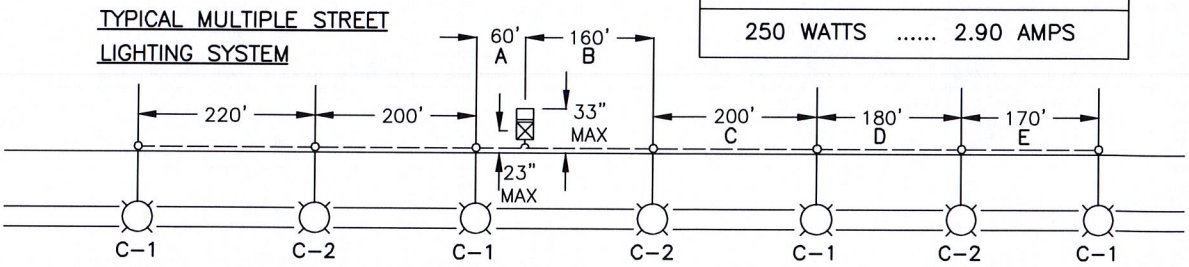

EXAMPLE CALCULATION:

FIND TOTAL VOLTAGE DROP IN CIRCUIT #1: (120 VOLT SYSTEM)

VOLTAGE DROP CALCULATIONS

SECTION A = $\frac{20(2.9 \times 4)(11)}{6{,}530}$ = 0.39

SECTION B+C = $\frac{360(2.9 \times 2)(11)}{6{,}530}$ = 3.52

SECTION D+E = $\frac{350(2.9 \times 1)(11)}{6{,}530}$ = 1.71

TOTAL VOLTAGE DROP = 5.62

LEGEND

- 250W, HIGH PRESSURE SODIUM LUMINAIRE
- C-1 — CIRCUIT #1
- ⊠ — SERVICE CON
- ---------- — CONDUIT W/ #12 A.W.G CONDUCTORS
- ▭ — SERVICE POINT PULLBOX (ADJACENT TO SERVICE CON)

NOTE:

MAXIMUM VOLTAGE DROP ALLOWED IN 120 VOLT SYSTEM = 7.0 VOLTS.

City of Winters *PUBLIC WORKS DEPARTMENT*	DATE: DEC 2015
3-WIRE STREET LIGHT WIRE SIZE AND VOLTAGE DROP CALCULATION	SHEET # 1 OF 1
CITY ENGINEER APPROVED Nicholas J. Ponticello P.E. NO. 49584	DRAWING #: 5-8

CONDUIT SIZING

CONDUIT SIZE	1"	1.5"	2"	2.5"	3"	3.5"
EQUIVALENT NUMBER OF #14 A.W.G. CONDUCTORS*	8	19	31	44	69	91

1 – #12 CONDUCTOR = 1.2 – #14 CONDUCTORS

1 – #10 CONDUCTOR = 1.5 – #14 CONDUCTORS

1 – #8 CONDUCTOR = 2.3 – #14 CONDUCTORS

1 – #6 CONDUCTOR = 3 – #14 CONDUCTORS

1 – #4 CONDUCTOR = 4 – #14 CONDUCTORS

1 – #2 CONDUCTOR = 5.3 – #14 CONDUCTORS

CIRCUIT BREAKER SIZING

CONDUCTOR SIZE A.W.G.	MAXIMUM CIRCUIT BREAKER AMPERAGE
#2	100
#4	80
#6	50
#8	40
#10	30

NOTES:
1. THE BREAKER SIZE SHALL BE 30 AMP MINIMUM OR AS DETERMINED BY THE LOAD REQUIREMENTS.
2. MINIMUM NEW CONDUIT SIZE IS 1-1/2"

City of Winters *PUBLIC WORKS DEPARTMENT*	DATE: DEC 2015
STREET LIGHT CONDUIT AND BREAKER SIZING	SHEET # 1 OF 1
CITY ENGINEER APPROVED Nicholas J. Ponticello P.E. NO. 49584	DRAWING #: 5-9

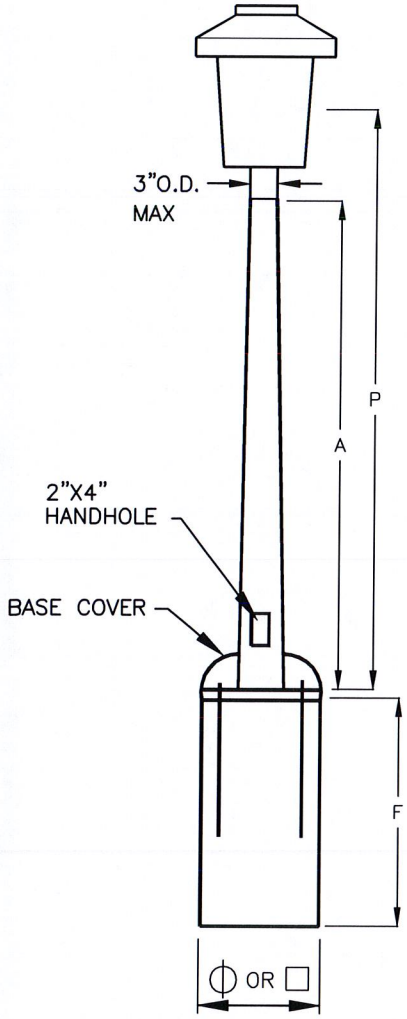

POST TOP LIGHT

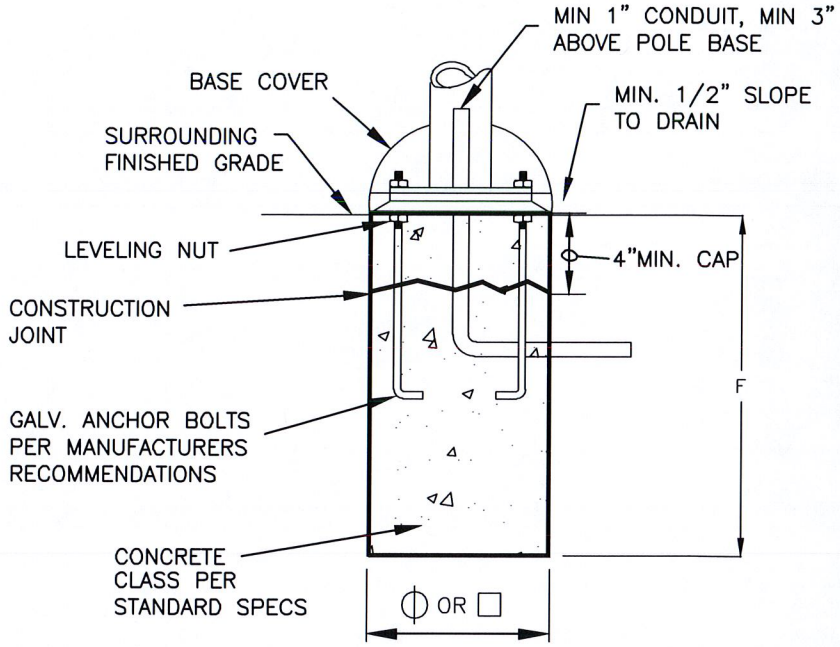

FOUNDATION

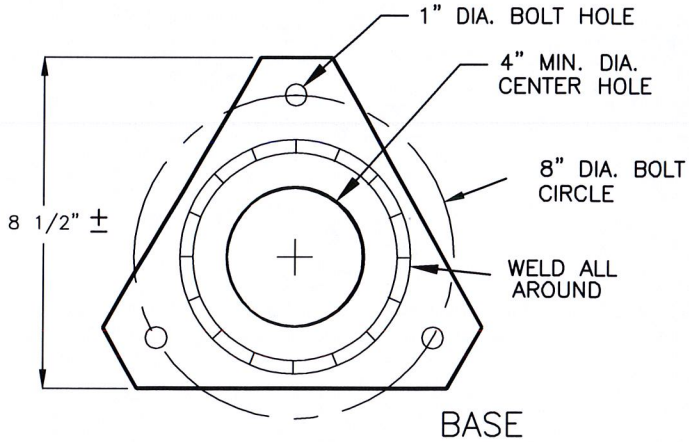

BASE

POLE DATA			FOUNDATION		
A HEIGHT	P MTG. HGT.	ACCEPTABLE PRODUCTS	F DEPTH	Φ DIA.	□ SQ.
12', 14', 16'	VARIES	UNION METAL DESIGN SERIES 201 AMERON SERIES G F VALMONT SERIES DS 200 OR APPROVED EQUAL	30"	27"	24"
18'	VARIES		36"	27"	24"

City of Winters *PUBLIC WORKS DEPARTMENT*	DATE: DEC 2015
POST TOP STREET LIGHT	SHEET # 1 OF 1
CITY ENGINEER APPROVED *Nicholas J. Ponticello* P.E. NO. 49584	DRAWING #: 5-10

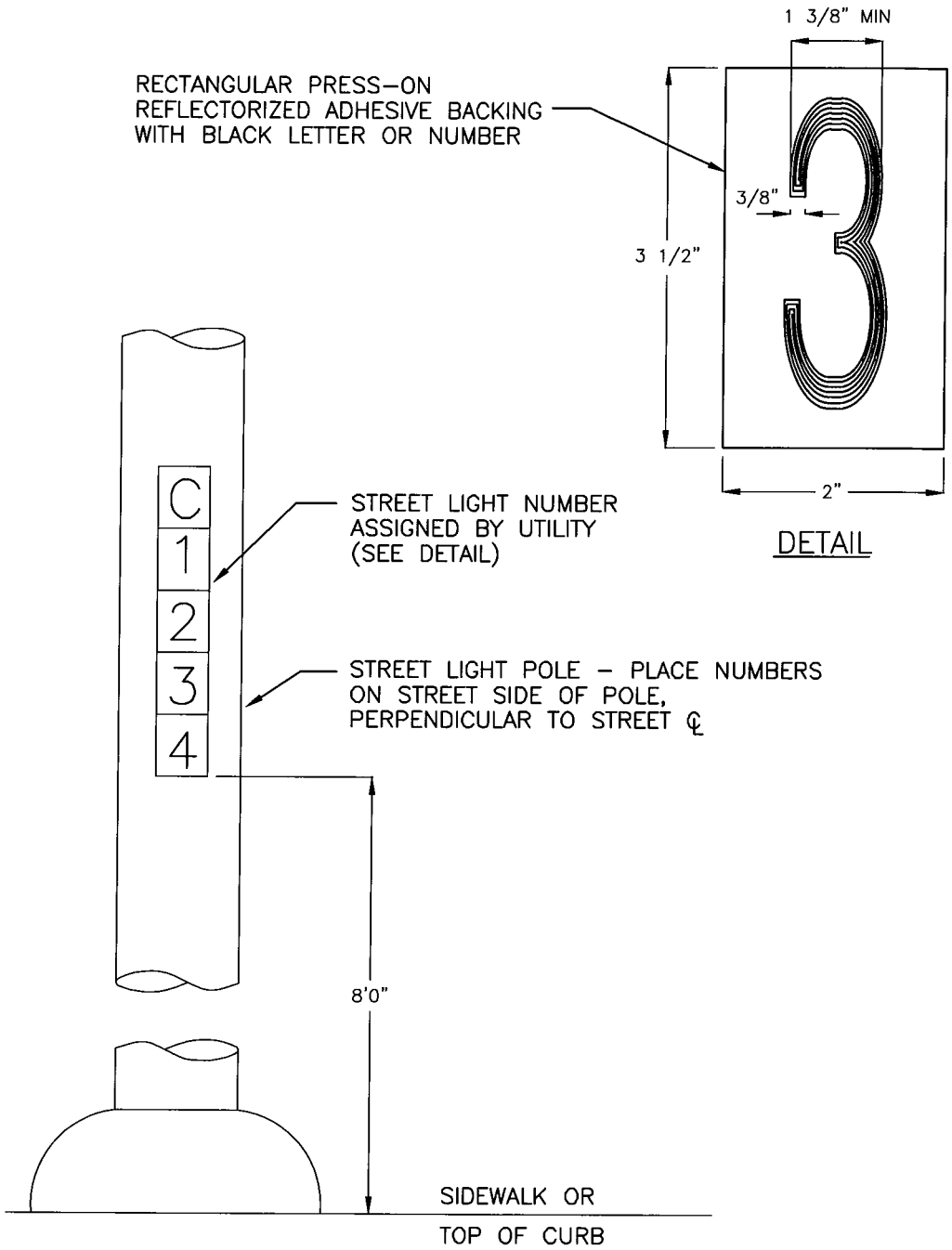

City of Winters *PUBLIC WORKS DEPARTMENT*	DATE: DEC 2015
STREET LIGHT NUMBERS UTILITY	SHEET # 1 OF 1
CITY ENGINEER APPROVED Nicholas J. Ponticello P.E. NO. 49584	DRAWING #: 5-11

SECTION 6

SOUND BARRIER DESIGN

6-1 LOCATION REQUIREMENTS

Sound barriers may be required along the rear and side property lines of residential developments adjacent to freeways, major highways and other ground level noise generators in order to achieve the noise objectives of the City of Winters General Plan, Zoning Ordinance, and as required by the project conditions of approval.

6-2 DESIGN

The sound barrier shall be designed to meet the noise reduction objectives as established by the project conditions of approval and as required by the Community Development Department. The design review submittal shall include structural calculations prepared in accordance with Building Code requirements for review and approval by the City Building Official. Sound wall design details and submittals shall be reviewed and approved by the City Engineer and by the Community Development Department.

Design Details shall include, but are not limited to:

- Materials; whether masonry or concrete, including reinforcement
- Wall height and thickness
- Footings
- Earth retention allowances
- Construction requirements
- Architectural features and any painting

Standard sound barrier designs may be approved for use in the City of Winters. Any such request shall include plan details and calculations prepared and signed by an appropriate Consulting Engineer. The manufacturer, developer or contractor shall make an application and pay all related review and approval costs.

Sound barriers shall be designed for a minimum longevity of 30 years.

Sound barriers normally will not be allowed within public rights of way when installed as a condition of the development or as an option of the builder. The City Engineer may allow certain sound barriers within the public rights of way with an encroachment permit. Normally, if 2 feet or less of public street right of way is available, or if there are existing underground utilities within 5 feet of a potential barrier location, no permit will be granted.

Sound barriers constructed along freeways, or at the back of sidewalk along the outside of curved major streets, shall incorporate a barrier-type design element to minimize the potential for vehicles penetrating the wall. Other locations that represent a higher potential for run-off-road accidents shall be required to incorporate a Caltrans Type 60 (or equivalent) barrier-type design element.

All open or non-reinforced cells in masonry block sound barriers shall be fully grouted.

6-3 PLAN REQUIREMENTS

All construction details for sound barriers, including the locations and limits, shall be shown on the site improvement plans.

Sound Wall construction details shall comply with APWA Standard Plan 601-3 unless a project specific design is submitted along with design calculations for review and approval.

BLANK PAGE

SECTION 7

SANITARY SEWER DESIGN

7-1 DESIGN CRITERIA

These Improvement Standards are minimum design criteria. The Actual design parameters must be established by the designer based on site-specific conditions. These Improvement Standards shall also apply to any privately owned and maintained system serving 4 or more residential units or any commercial or industrial uses. Each property owner is responsible for the installation of a collector sewer across their property and/or frontage that will serve all upstream uses within an upstream service area. All connections shall comply with the Winters Municipal Code regarding fees and other requirements. All new sewer systems shall also comply with the City of Winters Wastewater System Master Plan.

7-2 FLOW DETERMINATION

Flow determination shall be based upon the approved zoning, existing land uses or General Plan land use designations, whichever produces the greatest flow. The minimum population density used shall be based on the latest US Census Tract data for single family residential housing. Design flows shall be calculated using the following data:

Land Use	Unit	Population Density	Flow Generation	Minimum Average Daily Flow	Peaking Factors[1]
		# per unit	Gallons per day	Gallons per acre-day	
Single Family Residential	Residence	3.5	90 per person	-	3
Multi-Family Residential	Residence	3.0	90 per person	-	3
Commerical, Office	Acre			2,500[2]	2-4[2]
Central Business District	Acre			3,500	3
Light Industrial	Acre[2]			2,000[2]	2-4[2]
Heavy Industrial	Acre[2]			3,000 – 5,000[2]	2-4[2]
Recreation and Parks	Acre			200	
Elementary School	Student		50 gal per student day	(25,000 gpd)	3
Middle School	Student		50 gal per student day	(30,000 gpd)	3
High School	Student		60 gal per student day	(45,000 gpd)	3

1: Peaking Factors may be increased or decreased based on flow peaking studies for trunk mains and pumping stations.

2: Subject to review and confirmation of intended uses and waste generation rates. Industrial uses may require private pre-treatment and/or peak reduction facilities.

7-3 DESIGN FLOW CRITERIA

Design flow shall be calculated using the average flow for the upstream service area, as described above and used in the design flow equation. The following formula will be used along with the above tabular values for calculating the average flow design flows unless more current design criteria is available through Master Plan updates:

Design Flow = [Average Daily Flow X Peaking Factor = (PDWF)]
+ Infiltration/Inflow (I/I) allowance (600 gallon per acre-day minimum)
= Peak Wet Weather Flow (PWWF)

7-4 PIPE CAPACITY, SLOPE, VELOCITY, SIZE, DEPTH AND MATERIAL:

A. **Size** - The minimum size collector sewer shall be eight inches in diameter unless otherwise approved by the Director.

B. **Slope and Velocity** - Manning's formula shall be used to determine the relation of slope, design flow, velocity, diameter, and "n" value. The "n" value shall be 0.013 for all pipe materials.

1. When the minimum velocity of 2 feet per second cannot be achieved the minimum slope shown below shall be used. The following is a table of slopes and design flow capacities for various pipe diameters. Pipe slopes that are less than those listed in this table shall not be used without the approval of the Director. The slopes indicated are based on a velocity of two feet per second with the pipe flowing full.

Inside Diameter (Inches)	Minimum Slope	Design Capacity (mgd)	SF Units or Equivalent
8"	0.0035	0.33	300
10"	0.0025	0.51	550
12"	0.0020	0.74	850
15"	0.0015	1.60	2,100

2. The maximum depth of flow at design conditions in any collector (12-inch inside diameter or less) shall be 0.7 of the pipe diameter. Mains larger than 12-inches in inside diameter may be designed to flow full unless direct service sewer connections are planned; in which case the 0.7 diameter maximum depth shall govern.

C. **Capacity** - Pipe capacity, in all cases, shall be adequate to carry the design flow from the entire tributary area, even though said area is not within the project boundaries.

D. **Depth** - In the design of a system, one of the controlling conditions shall be that the collector system is to be at sufficient depth to provide a minimum slope for the service sewer of 1/4 inch per foot (or 2%), at the same time maintaining a minimum cover of 12 inches at any buildable location within the properties to be served, and a minimum of four feet of cover at the right of way line, except that the depth shall be increased to five feet when a water main is installed at the back of the sidewalk.

Minimum depth of new sewer collectors or mains shall be 6 feet from finish grade to top of pipe. Minimum depth for sewer services or laterals shall be 5 feet from top of curb to invert of pipe at the curb line. The minimum depths may be reduced if it can be shown that on the basis of total life cycle costs it is in the best interests of the City, subject to review and approval by the

Director. In reduced cover situations, design of the pipe trench section and selection of pipe materials shall be as approved by the Director.

E. **Material** - Pipe material shall be as approved by the Director, and shall conform to the requirements of the City of Winters Standard Construction Specifications. Pipe materials, which will normally be considered, are as follows:

1. Polyvinyl Chloride (PVC) C900 DR 14 conforming to ASTM D1784 or Polyvinyl Chloride Pipe (PVC) SDR 26 conforming to ASTM D3034 and F679.
2. Vitrified Clay, Bell and Spigot Pipe conforming to the provisions the City of Winters Standard Construction Specifications. VCP shall require approval by the City Engineer.
3. Ductile Iron Pipe conforming to the provisions of the City of Winters Standard Construction Specifications for pipelines 10 inches in diameter and less. Ductile Iron should only be used when standard depths cannot be achieved and requires approval by the City Engineer.
4. PVC lined Reinforced Concrete Pipe (18" diameter and larger only) conforming to the provisions of the City of Winters Standard Construction Specifications.

7-5 GROUNDWATER REQUIREMENTS

A Geotechnical Investigation Report with groundwater handling or design recommendations shall be required for all plans installing public sewer facilities or private sewer systems constructed in high groundwater areas.

7-6 SEWER LOCATIONS AND ALIGNMENT REQUIREMENTS

A. **General** - All sanitary sewers shall be placed within rights of way dedicated for public streets unless the use of easements is specifically approved by the Director. In some streets, dual collectors may be required.

There shall be a minimum horizontal clearance of ten feet between parallel water and sanitary sewer mains and the water main shall be higher than the sewer. On crossings, the water main shall be at least 12 inches above the sewer main. If a sanitary sewer force main must cross a water main, the requirements of Section 8-14.B shall apply.

B. **Location in New Subdivision** - In new subdivisions, sewers shall be located six feet south or east of street centerlines within minor and primary streets. If a street loops 180 degrees or more it is not necessary for the collector sewer to cross to the other side of the street to meet this requirement.

C. **Location in Existing Streets** - When sanitary sewers are to be installed in an existing street, factors such as curbs, gutters, sidewalks, traffic conditions, traffic lane conditions, pavement conditions, future street improvements plans, and existing utilities shall all be considered.

D. **Easements** - Permanent easements shall be a minimum of 15 feet wide for sewers up to 18 inches in inside diameter and beginning at 20 feet wide for larger diameter sewers. A trench wall slope of 1.5:1 (Hor:Ver) shall be the basis on which the easement width is determined. The slope may be adjusted as required by existing soil conditions.

Temporary working easements of adequate dimensions shall be provided to allow the construction within the permanent easement to be completed in a safe and reasonable manner.

E. **Water Well Clearance** - No sanitary sewer interceptor, trunk main, collector, or service shall be placed nearer than 100 feet to any water well, public or private, unless the well has been abandoned in full accord with the Yolo County Environmental Health Department requirements, or the location otherwise approved, in writing, by the appropriate regulatory (State and/or

County) agencies. If a clearance of less than 100 feet is approved, all pipe within that distance from the well shall be of material approved by the Director. In no case shall a clearance of less than 50 feet be allowed.

F. **Alignment** - Alignment of all sewer pipe and structures shall be designed to provide a minimum one foot clearance from all other utilities and/or improvements, unless otherwise approved by the director.

1. Horizontal alignment shall be parallel to the street centerline wherever possible. Minimum radius for sanitary sewers 8 inches through 12 inches in diameter shall be 194 feet. A larger radius shall be used wherever practicable or where necessary to avoid joint deflection in excess of 80% of the pipe manufacturers' recommended maximum. Only factory joints will be allowed. Curve information shown on the plans shall include pipe radius (if not concentric with street centerline), sub-tended angle, length, and if needed, maximum pipe lengths.

2. Vertical alignment shall provide a constant slope between manholes. If a change in grade is necessary, construction of a manhole shall be required unless the Director approves the use of a vertical curve. In such case, elevations shall be shown at ten-foot intervals throughout the length of the vertical curve. Joint deflections in excess of 80% of the pipe manufacturers' recommended maximum will not be allowed. Only factory joints will be allowed.

7-7 TRENCH LOADING CONDITIONS AND PIPE DESIGN

A. **Rigid Conduit Loading** - On rigid conduits, Marston's formula shall be used to determine the load placed on the pipe by backfill. The procedure for rigid pipe is described in the ASCE Manual and Report of Engineering Practice 60, the Clay Pipe Engineering Manual, and in similar handbooks. In the absence of specific soils data, as determined by a Geotechnical Engineer, a soil weight of 120 p.c.f. and a k_p factor of 0.110 shall be used.

B. **Safety Factor** - On rigid conduits, a safety factor of 1.25 shall be used for reinforced concrete pipe, and 1.5 for all other rigid pipe. Only the three edge bearing strength of the pipe shall be used in the computations for rigid pipe.

C. **Flexible Conduit Loading** - On flexible conduits, Marston's formula for flexible conduits as shown in the ASCE Manual and Report of Engineering Practice No. 60 and in other similar handbooks shall be used to determine the load placed on the pipe by the backfill. The maximum load allowable shall be determined by pipe deflections computed by the Iowa Deflection Formula (or Spangler's Formula). The soils reaction modulus (E') shall be estimated using a method acceptable to the Director, and shall consider the modulus values of both the native and the bedding materials (ATV method). The bedding soils reaction modulus (E') used in the deflection calculation shall be 1,000 psi for Type II and Type IIA bedding, utilizing imported material to twelve inches above the top of the pipe. Deflection lag factor shall be 1.5. In the absence of specific soil data, as determined by a Soils Engineer, a soil weight of 120 p.c.f., a ku factor of 0.110, and a bedding constant of 0.110 shall be used. Placement of flexible conduit within soils equivalent to Class V and types MH and CH of Class IV ASTM D2321 material will not be permitted unless approved by the Director.

D. **Allowable Deflection** - On flexible conduits, the maximum allowable deflection shall be 3% of the nominal inside diameter. Deflection shall be measured by passing a certified mandrel the length of the installed pipe after completion of all backfill and compaction operations, including testing. Computations shall be submitted showing the ability of the conduit to withstand local buckling unless the design conforms to these standards.

E. **Bedding and Initial Backfill** - Bedding types and factors shall conform to Standard Drawing 7-4. Bedding and initial backfill type shall be as necessitated by height of cover over the pipe, trench width, pipe strength, and other factors used to determine safe pipe loading.

Special attention shall be given to backfill requirements for pipe located in State rights-of-way and for pipe placed in areas where trench width is excessive, such as in the vicinity of bore pits. See Section 7-13 regarding this condition. Any special backfill requirements shall be noted on the plans.

Unless otherwise noted on the plans, bedding and initial backfill for all pipe sizes shall be Type II, with trench widths subject to limitations set forth in Standard Drawing 7-4 and in the Standard Specifications. The minimum trench width for all rigid pipe shall be pipe O.D. plus 12 inches.

Bedding and initial backfill for flexible conduit shall be Type II Alternate utilizing imported material to twelve inches above the top of the pipe. Placement of native material, between springline and twelve inches above the top of pipe will not be permitted. The minimum trench width for flexible pipe shall be pipe O.D. plus 24 inches.

Type III and IV bedding and initial backfill are intended primarily for emergency field conditions. Their use shall normally not be specified on the plans and shall require specific written approval of the Director before use. Type III and IV bedding and initial backfill shall not be used with flexible pipe materials.

F. **Special Pipe Strength Requirements** - Ductile iron, or other high-strength pipe approved by the Director, shall be used whenever cover is greater than 25 feet, or extra support strength is required (such as to resist traffic loading). Ductile iron pipe, Class 200 (DR-14) PVC pipe conforming to the requirements of AWWA C900, or other high-strength pipe approved by the Director, shall be used whenever cover is less than four feet, or insufficient clearance exists between the sewer pipe and rigid or load transmitting structures.

G. **Design Guide** - Tables which relate cover, pipe diameter, trench width, bedding and initial backfill type for vitrified clay pipe according to the procedures contained in these Standards, are provided on Standard Drawing 7-4.

7-8 MANHOLE CRITERIA

A. **General** - Manholes shall be placed at all intersections of sanitary sewer mains, at the end of any main terminating in a cul-de-sac, at the end of all permanent mains 120 feet or more in length, and at the end of any temporary main more than 200 feet in length. All manholes from which sewer main extensions are anticipated shall have a pipe stub installed at the grade and in the direction of the anticipated extension. Summit manholes connecting two sewer collectors are not acceptable. Manholes in PVC collector systems shall be located to reduce or eliminate the need to curve the collector pipes.

B. **Spacing** - Maximum spacing of manholes shall be 400 feet for all straight mains of ten-inch diameter or less. A main with a radius greater than 400 feet shall be considered as straight for purposes of this section. Manhole spacing on mains, which are on a continuous curve of 194-foot radius (min. allowable) shall be 200 feet. Manhole spacing on curved mains of radius between 194 and 400 feet, or where only a portion of the main is curved, shall be adjusted proportionately. Reverse curves require a manhole at the point of tangency between the curves. A manhole shall be required at any change in vertical alignment, unless the use of a vertical curve is approved by the Director. A manhole shall be placed at any angular or abrupt change in horizontal alignment.

C. **Elevation Criteria** - When two mains of the same size enter a manhole such that the flow of one must change direction more than 20 degrees, or if flow in a single main must change direction

more than that amount, the invert grade at the exit must be at least 0.10′ below that of the entrance pipe or, as a maximum, the crown of the exit pipe shall match the invert of the entrance pipe. If the pipes entering and exiting any manhole are not of the same size, the minimum invert elevation differential shall be based on pipes matched crown to crown. The maximum invert elevation differential shall be based on the invert of the entering pipe matching the crown of the exit pipe. Drop connections are not governed by the above elevation requirements.

D. **Construction Requirements -** Manhole construction shall conform to the provisions of Standard Drawings 7-1 to 7-3.

If the distance from the crown of the pipe to the top of the rim is less than 6.9′ an 18-inch high cone shall be used. Manholes shall use flat slab tops that have through mains and less than 5.7′ from the crown of the pipe to the rim. The plans shall note that the frame on manholes located in unimproved areas shall be set 1.0′ above existing ground level.

Manholes for flexible conduit shall be designed such that flexing of the pipe does not result in infiltration or exfiltration at the interface between manhole and pipe. The Director may require specially designed flexible boots or integrally cast bells. Pipe material, which does not provide adequate bonding between pipe and manhole, may similarly require special designs.

E. **Vacuum Testing -** shall be performed per ASTM C 1244-93 on all manholes.

7-9 DROP CONNECTION CRITERIA

Drop connections shall be avoided when possible. Drops will be required when adjacent parallel sewer pipes tie into the same manhole. Drop connections shall conform to Standard Drawing 7-3. The inside drop connection shall be used for four-inch through ten-inch diameter collectors, and services. There shall be only one inside drop connection into a four-foot diameter manhole. Whenever possible, the slope of the incoming main shall be increased to eliminate the need for the drop.

7-10 FLUSHING BRANCH CRITERIA

A flushing branch may only be used at the end of a collector less than 200 feet in length if the collector extends to a subdivision boundary and if there are definite plans for its extension. If a collector extends to a subdivision boundary, is planned for definite extension, and has no service sewer connections, it may be capped. Flushing branches shall conform to Standard Drawing 7-8.

7-11 SERVICE SEWER DESIGN

A. **General** - Service sewers shall conform to Standard Drawing 7-7 and shall be constructed normal or at right angles to the lateral unless otherwise approved by the Director. The service sewer shall extend from the collector sewer to the edge of public right of way or edge of easement. Service sewers shall extend one foot beyond the edge of the pavement of any private road and easements of adequate width to accommodate the services shall be obtained. A plan and profile of any service sewer shall be supplied to the Director upon request. A 2-way cleanout will be required when appropriate. Construction of the cleanout to grade for all sewer services is required. Construction of the top 1 foot of the cleanout riser may be delayed until the installation of the building sewer at the option of the developer, except where other utilities are to be installed at the back of the sidewalk (refer to Note 10: Standard Drawing 7-7). If construction of the top 1 foot of the riser is delayed, the location shall be accurately staked with a 4"x 4" post.

The location of all sanitary sewer services shall be permanently marked with an “S” in the face of the concrete curb.

B. **Sizing -** Normal service sewer size is four inches for residential and six inches for multi-family or commercial. Six-inch or larger service sewers shall serve schools and other developments expected to contribute high sewage flows. In addition, service sewers shall be sized according to requirements of the Uniform Plumbing Code, and as determined by the design engineer. If the service sewer and collector are of the same size, a manhole must be constructed. If the collector is larger than the service sewer, a factory fitting at the connection is satisfactory. Service sewer connection to trunk service will not be allowed.

C. **Connection Limitations -** Service sewers shall not directly connect to sewer mains designed to flow full or to mains more than 16 feet in depth without the approval of the Director.

D. **Material -** The "T" or wye and the service shall be of the same material as the collector to which it connects unless that material is not allowed..

E. **Location -** When sanitary sewers are constructed as part of new subdivision improvements, a service sewer shall be constructed to each lot. In new subdivisions or developed areas, unless specifically requested otherwise in writing by the property owner or Consulting Engineer, service sewers shall be placed on the low side of any subdivision lot or similar parcel with two percent or greater slope across the front. Otherwise, the sewer service shall be placed in the center of said lot or parcel. Consideration shall be given to trees, improvements, proposed driveways etc., so as to minimize interference when the service sewer is extended to service the house. If the property is located such that service is available both to a main located in an easement and also in right of way, service shall be to the latter location unless otherwise approved by the director. No service sewer shall be located such that future on site construction will result in the main being in such proximity to a water well or water main or service that applicable health standards will be violated.

F. **Depth -** The Consulting Engineer shall verify the adequacy of the normal service sewer depth at the edge of easement or right of way to serve the intended parcel. A depth of six feet to crown of pipe, measured from existing ground surface or edge of adjacent roadway, whichever is lower, shall be considered normal service sewer depth, except under conditions on Standard Drawing 7-7. Whenever greater depth is required, the Consulting Engineer shall designate the invert elevation of the service sewer at the edge of the right of way or easement on the construction plans. If a joint trench is being utilized for other utilities, the Consulting Engineer shall indicate on the plans that a Joint trench will exist and shall adjust service elevations as necessary. It shall be the responsibility of the Consulting Engineer to arrange for coordination of the grade of utilities located in the joint trench and the service sewers.

G. **Service Requirements in Developed Areas** - In developed areas, a service sewer shall be provided to each legal parcel containing a source of sewage and having a property line less than 200 feet from a collector. A property owner's request for service location shall be honored whenever practicable. Parcels, which have two or more sources of sewage, must have an independent service sewer provided to each sewage source. A service sewer shall be provided to each subdivision lot or lot similar as to size and possible development. At an early stage of design, the Consulting Engineer shall send every property owner affected by the proposed work a questionnaire requesting, in writing, the owner's preferred service sewer location. In absence of a response to this questionnaire, the Consulting Engineer shall provide a service sewer as required by this Section. In addition, when service sewers are staked immediately prior to construction, each property owner shall be given notice that he should give consideration to the staked location of his service sewer and, if not satisfactory, immediately notify the Consulting Engineer. The date of notification, nature of change, and other pertinent information shall be recorded. Compilation of this information shall be the responsibility of the Consulting Engineer and the information shall be furnished to the Director upon request.

7-12 CREEK CROSSING DESIGN

Advance approval of the Director and of other appropriate agencies is necessary prior to initiating design. Copies of required permits shall be provided to the City Engineer prior to approval of the plans.

A. **General** - In all cases, the proposed future creek bed elevation shall be used for design purposes. Crossing details of pipe, piers, anchorage, transition couplings, etc., shall be shown upon a detail sheet of the plans in large scale.

B. **Design -** Calculations shall be submitted which clearly indicate the design of the pipe and supports regarding impact, horizontal and vertical forces, overturning, pier and anchorage reactions, etc.

C. **Construction and Material -** For collector sizes ten inches and smaller, ductile iron pipe or other pipe material as approved by the Director shall be used under the full creek width, plus ten feet each side, unless the pipe is four feet or more below the creek bed elevation. For main sizes twelve inches and larger, pipe used shall be as directed by the Director. Special care shall be taken to provide a firm base for the pipe bedding. The plans shall specify that all soft or organic material within the creek banks shall be replaced with select imported backfill. In addition, the pipe shall be encased in concrete or soil cement shall be used to protect the pipe for the full width of the creek. Unless otherwise directed a clay soil plug shall be required at the top of the pipe at the downstream side of the crossing. The plug shall be a minimum of four feet in length, shall extend the full width of the trench, and shall extend twelve inches above and below the pipe or as approved by the Director.

   If the pipe must cross above the creek bed, ductile iron or welded steel pipe shall be used. Steel pipe may be cement lined and coated, fusion epoxy lined and coated, or glass lined; the Director shall specify or approve the type of coating and lining specified, and the gauge, class, or thickness of the pipe.

   Reinforced concrete piers of adequate depth shall be located as necessary for adequate support of the pipe. The pipe shall be held in cylindrical cradles, formed in the pier tops, by galvanized steel straps, with galvanized anchor bolts of adequate size. Cushion material shall be placed between the pipe, clamps, and support. The invert elevation at the point of maximum deflection of the suspended pipe shall be invert of the pipe at its downstream support.

7-13 BORING AND JACKING REQUIREMENTS

Where use of conductor casing is specified, the casing shall be reinforced concrete pipe or welded steel pipe. The casing shall be of sufficient diameter to allow dry sand to be blown into the void between the carrier and the conductor and to allow adjustment of the carrier pipe to grade. Normally, an inside diameter six inches greater than the outside diameter of the couplings of the carrier pipe is sufficient. Welded steel conductor pipe shall have a minimum wall thickness of ¼ inch for sizes up to and including 24 inches in diameter and 5/16 inch for sizes 27 inches to 36 inches in diameter. Every R.C.P. conductor must be designed for the loading condition and, if jacked, the additional loading imposed by the jacking operation.

Direct dry boring of reinforced concrete pipe and of the portion of sewers and service sewers, which pass beneath curbs and gutter, sidewalks, and other obstructions, up to a maximum length of 15 feet, is permissible. Six-inch and smaller pipelines may be installed by wet boring where approved by the Director. Pipe material used in the small size dry and wet bores shall be ductile iron pipe, or Class 200 (DR-14) PVC pipe conforming to the requirements of AWWA C900. Installation and other material specifications shall conform to the requirements of the Standard Specifications.

Backfill in bore pits shall be given special attention with respect to preventing structural failure of the pipe entering or exiting the conductor, and adequate bedding and initial backfill shall be specified.

7-14 PUMP STATION AND FORCE MAIN REQUIREMENTS

Every phase of pump station design, including force mains, shall be closely coordinated with and shall be under the direction of the Director. Pump station features shall include, but not be limited to, buried non-corrosive wet well, duplex (redundant) submersible pumps & motors, above ground weather proof enclosure for automated controls, telemetry, power supply, backup generator, all weather access, sulfide related corrosion control or reduction, life cycle cost analysis of proposed features, etc. Force Main features shall include, but not be limited to, non-corrosive pipe materials, pipe routing, exit manhole sulfide related corrosion control or reduction, life cycle cost analysis of proposed features, etc.

All pump stations shall include Supervisor Control and Data Acquisition (SCADA) with real-time communication to the City's master computer and alarm auto-dialer system. The real-time communication system shall be via the City's existing radio network.

All automated controllers, antennae and radios shall be of a make and model 100% compatible with the City's SCADA system. The system shall be approved by the City and the City reserves the right to specify the equipment to be installed in the pump station.

The City shall make all necessary modification to the master computer and alarm auto-dialer to incorporate the new station and the cost of these modifications shall be borne by the developer.

7-15 SEWER IMPROVEMENT PLAN REQUIREMENTS

Plans for the construction of sanitary sewers whether in conjunction with other improvements or for a sewer project only, shall conform to the following standards, as well as other standards contained in the General and Plan Sheet Requirements of these Improvement Standards.

A. **General Requirements** - All information, which, in the opinion of the Director, is necessary for the satisfactory design, review, construction, and maintenance of a project shall be provided and, where applicable, shall be shown on the plans.

   A parcel or area which benefits from and financially participates in a sewer construction project, but is not included within the project boundaries, shall have a note to this effect placed on the layout map and on the plan and profile sheet if the parcel appears thereon. Parcels, which make use of those facilities, may be subject to additional fees at the time of connection, if the participation has not been so noted.

B. **Plan and Profile Sheets** - Sewers shall be shown on the Project Street Improvements Plan and Profile sheets. The following standards, with respect to drafting and the information to be included on the plan and profile sheets, generally apply to projects in developed areas. In new subdivisions, only the requirements that are applicable shall apply.

   1. Sewer mains to be constructed shall be indicated on the profile by parallel lines spaced by one pipe diameter. Manholes shall also be indicated by parallel lines spaced according to scale. Slope shall be printed immediately inch above, and preferably parallel to, the pipeline, or between the parallel lines. The length, size, and type of pipe material between each manhole shall be printed parallel to the horizontal grid lines between manholes. All pipe-inverts at manholes and other structures shall be indicated on the profile. All manholes, manholes with drop connections, flushing branches, or other appurtenances shall be noted on the plan and profile with stationing. Cone heights other than standard, shall be clearly labeled for those manholes requiring the shorter cones due to lack of available depth. Existing facilities shall be shown in profile using dashed lines or shaded lines.

   2. In improved areas, the location of each service sewer proposed to be constructed shall be indicated on the plans by stationing, or by reference to a permanent, well-defined structure, if available. In new subdivisions, the service sewers shall be located by stationing unless the situation exists, such as at the end of a cul-de-sac, where stationing is not an adequate

description of location. In such cases a dimension to a lot line may be used. The invert elevation of the service sewer at its upstream end shall be shown on the plans whenever the service is not at standard depth. Standard depth shall conform to the conditions set forth on Standard Drawing 7-7.

Improvements or lots shown on a plan sheet but served to a main shown on another plan sheet shall have the direction of service shown by a small triangle and letter "S".

3. Permanent and working (temporary construction) easements shall be shown to scale on the plans. Easement dimensions shall be given and each easement shall be tied to the property line and the sewer main. Each permanent easement shown on the plans shall be identified by a box or table, on the same plan sheet, which gives the property owner's name and the book and page number in which the easement is recorded. The Consulting Engineer shall provide the book and page number.

4. Proposed sewer mains shall be adequately dimensioned from street centerline. If the sewer is to be located outside of the right of way, sufficient dimensions and bearings from an approved horizontal control shall be shown on the plans to locate the main in the field.

5. Indicate the limiting maximum trench width, as measured at the top of the pipe, on the plans between well-defined points of application, the pipe material and class, if more than one class is available; and the bedding-backfill type. If more than one combination of pipe material or class, maximum limiting trench width, or bedding type is available, a practical range of such combinations shall be shown on the plans.

6. Any other existing or proposed gas, electric, water, storm drain, etc., shall be determined and accurately shown on the plans. The location of any utility line which is parallel to and within five feet of the sewer main or which crosses the sewer main at an angle of 30 degrees or less shall be determined with an accuracy of 1.0± foot and the clearance shown on the plans.

7. Trees, and other objects within 10 feet of construction centerline, shall have their correct location shown on the plans and the clearance from construction centerline shown. The diameter of tree trunks and interfering heavy tree branches shall be noted. Removal of a tree or object, or other special handling shall be noted on the plans. The Consulting Engineer shall assume full responsibility for such notes as it is assumed that he has made all necessary arrangements with the owner of the object to be handled. Written documentation of any special arrangements regarding preservation of property made between property owners and the Consulting Engineer shall be supplied to the Director if no easement document is involved. If an easement is negotiated, all special arrangements are to be included in the easement document. The Director must approve tree removal within public rights-of-way or easements.

8. Culverts shall be shown on both plan and profile when crossed by the construction or when parallel and within 20 feet of the construction line. The size and type of all such culverts shall be indicated and when the culvert crosses or is perpendicular or nearly so and within 20 feet of the construction line, the invert of the culvert end nearest the construction line shall be shown.

9. Addresses of buildings shall be shown on the plan view, within the outline of the building. Only the front line and indication of sidelines of buildings need be shown.

C. **Detail Drawings -** Items of a special nature should be shown with detail drawings, either on the plan sheets, or on a separate detail sheet.

D. Connection to existing facilities where bypassing or stoppage of existing flow will be required - When improvement plans require connection to an existing facility which will require bypassing

or stoppage of existing flows, a note shall be placed on the plans which provides an estimate of the existing flow to be bypassed (in gpm), or the times between which the flow may be stopped. Contact the Public Works Director to determine the needed bypass flow requirement. A note on the plans shall require the contractor to contact the City Maintenance crews at least one week in advance to schedule the bypass/stoppage operation so that the temporary facilities and equipment can be evaluated for adequacy. Where the operation will be accomplished on a major trunk or interceptor, submittal of a work plan for review will be required prior to initiation of the operation.

7-16 DESIGN OF ON-SITE SEWER SYSTEMS FOR PRIVATE MULTIPLE OWNERSHIP RESIDENTIAL DEVELOPMENTS

The following design requirements shall apply to that portion of the sanitary sewer system within a privately owned multiple ownership development that is "on-site" and is not an outfall sewer for an upstream area, thereby being considered a private system and not subject to maintenance by Agency forces.

A. **Planned Unit Developments and Townhouses -** Residential developments where separate lots and structures are sold. These differ from usual subdivisions in that adjacent land is owned in common and a homeowner's association performs maintenance.

1. General - Sanitary sewers shall meet all requirements for public sewers contained in these Improvement Standards, except as specified below.
2. Manhole spacing - Maximum spacing of manholes on collectors shall be 300 feet for all straight runs of pipe.
3. Wyes - Wyes shall be used for all service sewers connecting to the "on-site" collectors. Tees as shown on Standard Drawing 7-7 are not allowed.
4. Minimum Depth - All collectors located within vehicular traffic areas shall have a minimum cover of five feet to finish grade. Additionally, if the cover over the pipe at any location may be less than two feet at any time after the pipe is installed, ductile iron pipe or Class 200 (DR-14) PVC pipe conforming to the requirements of AWWA C900 shall be installed.
5. Plan and Profile Sheets - "On-site" improvement plans may be prepared without the sanitary sewer profile that is required by these Improvement Standards, unless otherwise instructed by the Director. However, the final "on-site" grades and drainage facilities must be shown on the plans on the same sheet as the plan view of the sanitary sewers. Pipe dimensions shall be shown adjacent to the corresponding pipe section. The use of charts shall not be permitted for pipe dimensioning purposes. Plan sheet sizes shall be as specified in Section 3-1 of these Improvement Standards.
6. Location - Wherever possible, collectors shall be located in areas to be paved.
7. Review and Approval - Plans must be reviewed and approved by the City Engineer..

B. **Condominiums or Cooperative Developments -** Attached residential homes where shares of the total development are sold.

The "on-site" sanitary sewers may be constructed as required by the most current edition of the Uniform Plumbing Code (UPC). These plans will require the approval of the City Engineer.

7-17 MULTI-STRUCTURAL COMMERCIAL AND INDUSTRIAL DEVELOPMENTS

The "on-site" sanitary sewers for all new commercial and industrial developments containing more than one structure shall be designed in accordance with the requirements contained in Section 7-16A of these standards unless otherwise specified by the Director. Any separate building within a multi-building

commercial or industrial development shall have its own separate connection to a sewer system designed to public standards.

7-18 SEWER SYSTEM MASTER PLAN (SSMP) FOR A SPECIFIC AREA:

Submission of a Sewer System Master Plan (SSMP) for a specific area is required prior to review of the sewer design if there is a possibility that upstream or adjacent areas might require service through the subject property. The plan will fully describe the area to be served by the local collection facilities and the facilities necessary to provide that service.

A. General Requirements - In order to develop a SSMP the following information must be accumulated:

1. Regional Setting
2. Topographic map of the area to be served
3. Any specific projects that precipitated the study
4. Relevant assumptions or special conditions
5. Existing and proposed development
6. Ultimate development within the SSMP area
7. Hydraulic grade line at point of discharge into major facilities

The flows generated within each sub-service area of the sub-area plan will be calculated in accordance with the procedures contained in these Standards unless otherwise specified by the Director.

B. **Study Map -** The method of providing sewer service to the entire service area, including pipe sizes and slopes, shall be shown to the extent necessary to determine the requirements within the subject property.

C. **Report Preparation: -** In order to insure that all SSMPs are compatible and understandable; they will all be published in the following format.

1. Section Headings - Each SSMP shall be written with the following sections entitled as follows:

   a. Executive Summary - A concise description of the recommended sewer system, the impacts upon the Regional system, and any special design criteria necessary due to unusual local conditions.

   b. Introduction - A thorough background description of the sewer shed, any specific project(s) which precipitated the study, any special conditions, a vicinity map and a topographic map of the study area

   c. Criteria and Data - All of the information upon which the plan was based shall be delineated in this section in an easily readable manner.

   d. Plan description - A map showing the service area, the needed sewer facilities (pipes, slopes, flowlines, depths, and service areas), a spread sheet summary, and verbiage describing the collection system shall be included in this section

   e. Appendices - All of the backup information shall be included in an appropriate number of appendices

2. Report Format - The SSMP shall be bound as a single document with appropriate dividers between each section and pockets for all the required maps. The approval block shall be in a highly visible location at the end of the Executive Summary.

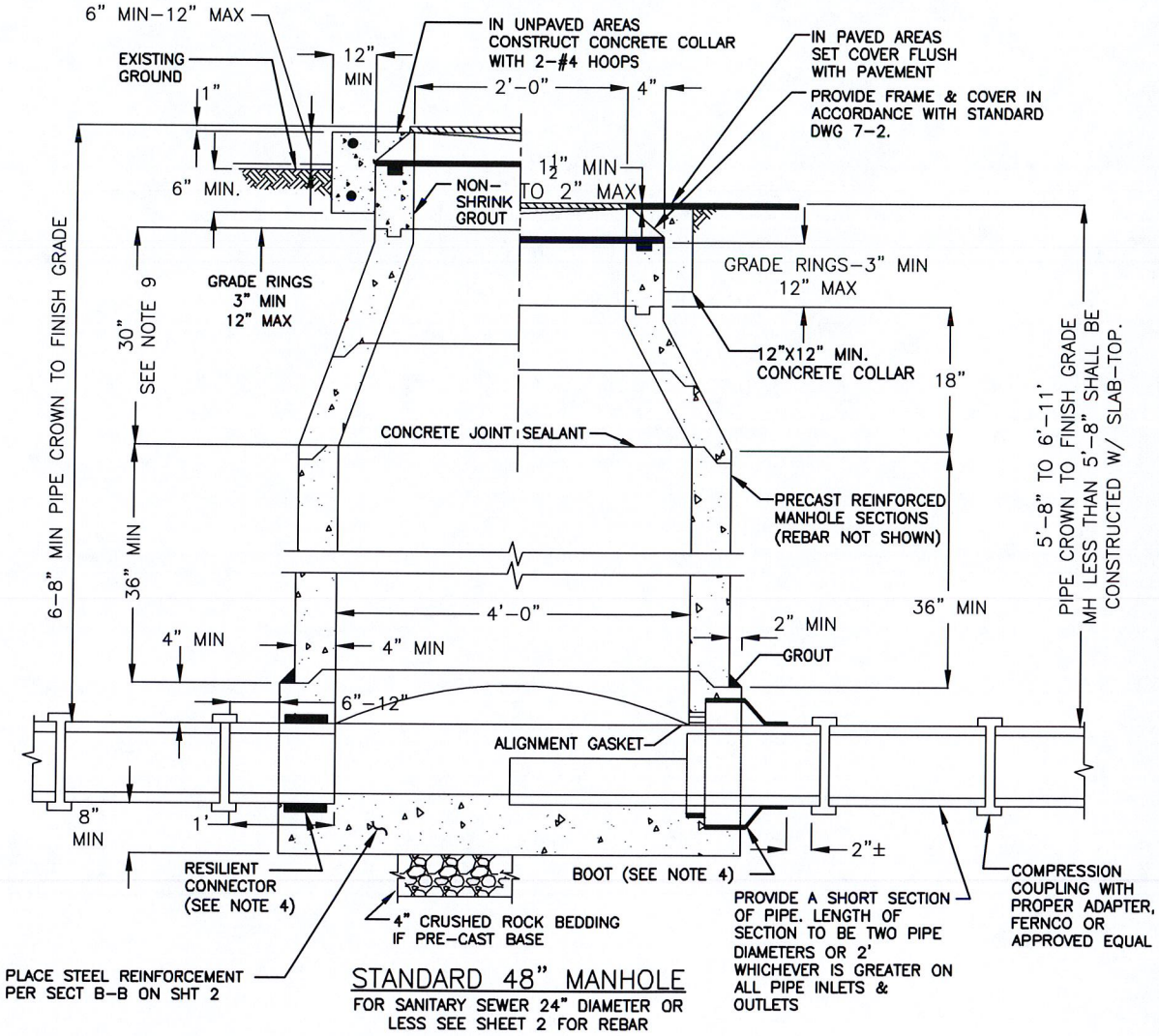

STANDARD 48" MANHOLE

FOR SANITARY SEWER 24" DIAMETER OR LESS SEE SHEET 2 FOR REBAR

NOTES:

1. CLASS A CONCRETE TO BE USED FOR MANHOLE BASES.
2. PIPE SHALL STOP AT INSIDE FACE OF MANHOLE OR SHALL BE CONTINUOUS THROUGH MANHOLE. IF PIPE IS LAID CONTINUOUS, TOP HALF SHALL BE REMOVED BY SAWCUTTING AFTER BASE IS POURED.
3. JOINTS FOR THE BARREL SECTION SHALL BE TONGUE AND GROOVE. ALL LIFTING HOLES SHALL BE SEALED WITH NON METALLIC NON–SHRINK GROUT.
4. FOR PRECAST MANHOLE BASES, CONNECTION OF THE PIPE TO THE MANHOLE SHALL USE A RESILIENT CONNECTOR CONFORMING TO ASTM STANDARD C923 SUCH AS KOR–N–SEAL, A–LOK OR EQUAL.
5. ANY SERVICE SEWER ENTERING A MANHOLE SHALL BE INSTALLED WITH THE INVERT ELEVATION OF THE SERVICE PIPE MATCHING THE CROWN ELEVATION OF THE EXIT SEWER EXCEPT WHEN AN INTERNAL DROP CONNECTION IS USED. IF THE MANHOLE AT THE END OF A CUL–DE–SAC IS CONSTRUCTED WITH A PRE CAST BASE. THE INVERT OF ANY SERVICE STUBS SHALL BE A MINIMUM OF ONE INCH ABOVE THE INVERT OF THE EXIT PIPE.
6. BEDDING FOR PRE CAST MANHOLE SHALL BE SELECT IMPORTED MATERIAL ½" OR ¾" CRUSHED ROCK (4" MIN).
7. THE STANDARD CONE MAY BE PROVIDED AS TWO PRE CAST SECTIONS.
8. FOR ASPHALT CONCRETE OVERLAYS ONLY, MANHOLE WITH DEPTHS OF 8' AND GREATER SPAN (MEASURED FROM THE FLOW LINE TO THE TOP OF CASING) THE MAXIMUM THROAT DEPTH IS 24 INCHES.
9. CUL–DE–SAC MANHOLES OR END OF LINE MANHOLES WITH A DEPTH FROM CROWN OF PIPE TO TOP OF RIM LESS THAN 6.9' BUT GREATER THAN 5.7' SHALL USE 18" HEIGHT CONES.
10. MANHOLES CONTAINING THROUGH MAINS WITH DEPTH LESS THAT 5.7' FROM CROWN OF PIPE TO TOP OF RIM SHALL USE FLAT SLAB TOPS.

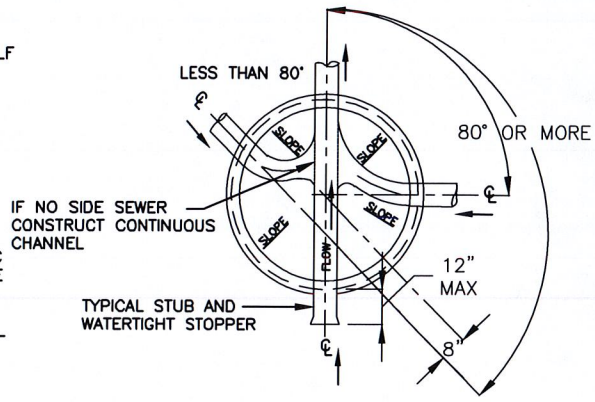

PLAN VIEW

48" MANHOLE SHOWING INTERSECTING SEWERS

City of Winters *PUBLIC WORKS DEPARTMENT*	DATE: DEC 2015
STANDARD 48" SEWER MANHOLES	SHEET # 1 OF 3
CITY ENGINEER APPROVED *Nicholas J. Ponticello* P.E. NO. 49584	DRAWING #: 7–1

CAMERA CHANNEL REQUIRED FOR
ALL 8" AND 10" LINES (SEE SHT 3, THIS DETAIL)

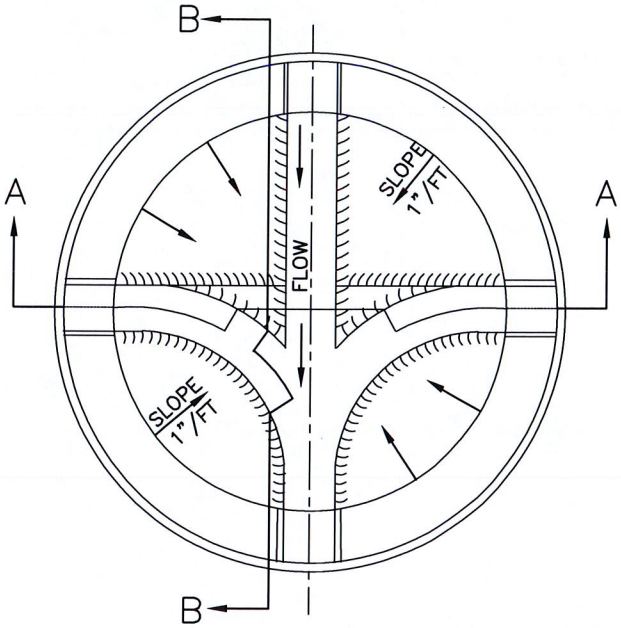

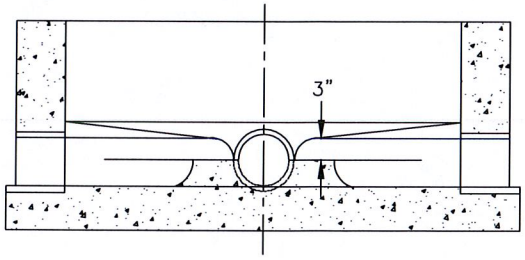

SECTION A–A

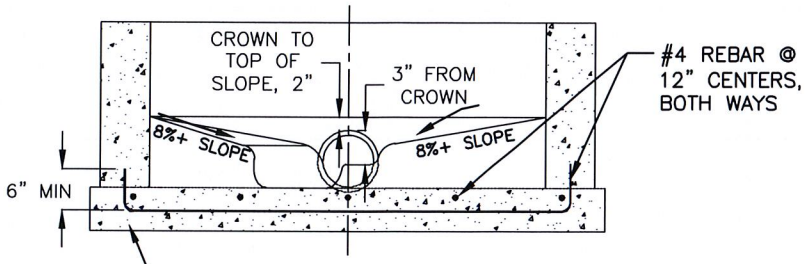

SECTION B–B

CONCRETE BASE MAY BE CAST–IN–PLACE AND POURED AGAINST UNDISTURBED MATERIAL OR PRE CAST AND PLACED ON 4" MIN OF CRUSHED ROCK PLACED OVER UNDISTURBED MATERIAL

City of Winters *PUBLIC WORKS DEPARTMENT*	DATE: DEC 2015
MANHOLE BASE CAMERA CHANNEL DETAIL	SHEET # 2 OF 3
CITY ENGINEER APPROVED *Nicholas J. Ponticello* P.E. NO. 49584	DRAWING #: 7 – 1

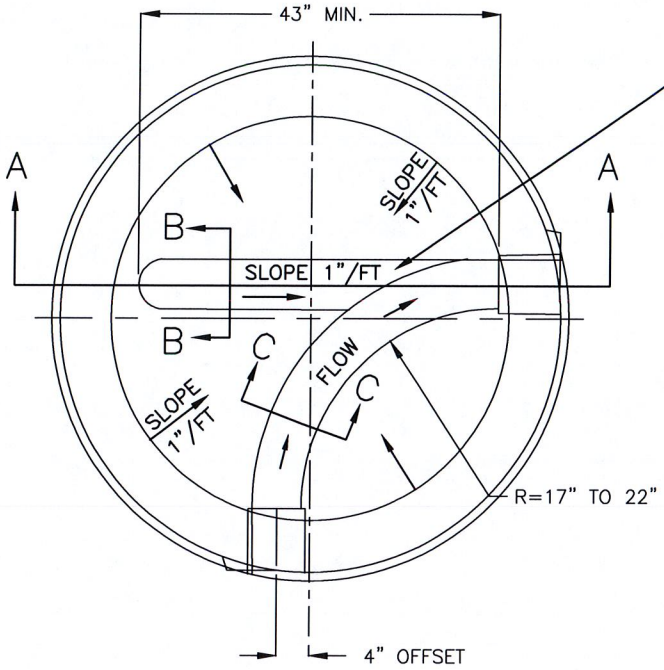

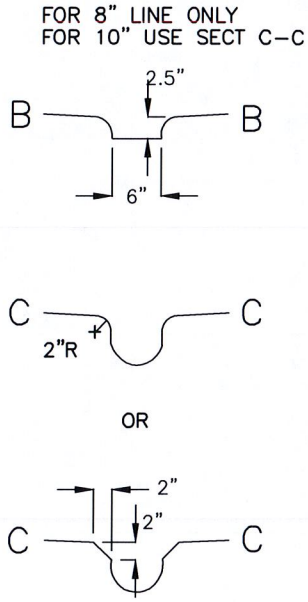

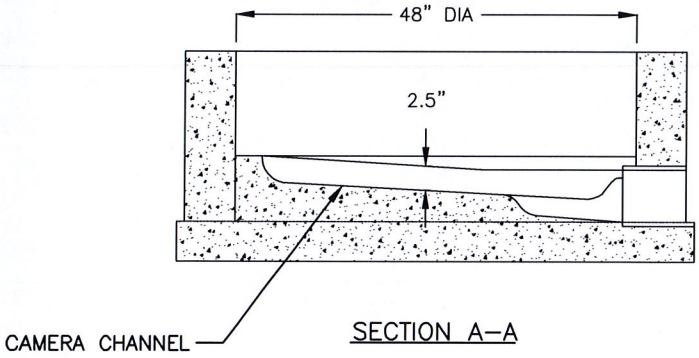

REBAR PATTERN PER SHT 2 OF 7-1, SECTION B-B

City of Winters *PUBLIC WORKS DEPARTMENT*	DATE: DEC 2015
MANHOLE BASE CAMERA CHANNEL DETAIL	SHEET # 3 OF 3
CITY ENGINEER APPROVED *Nicholas J. Ponticello* P.E. NO. 49584	DRAWING #: 7-1

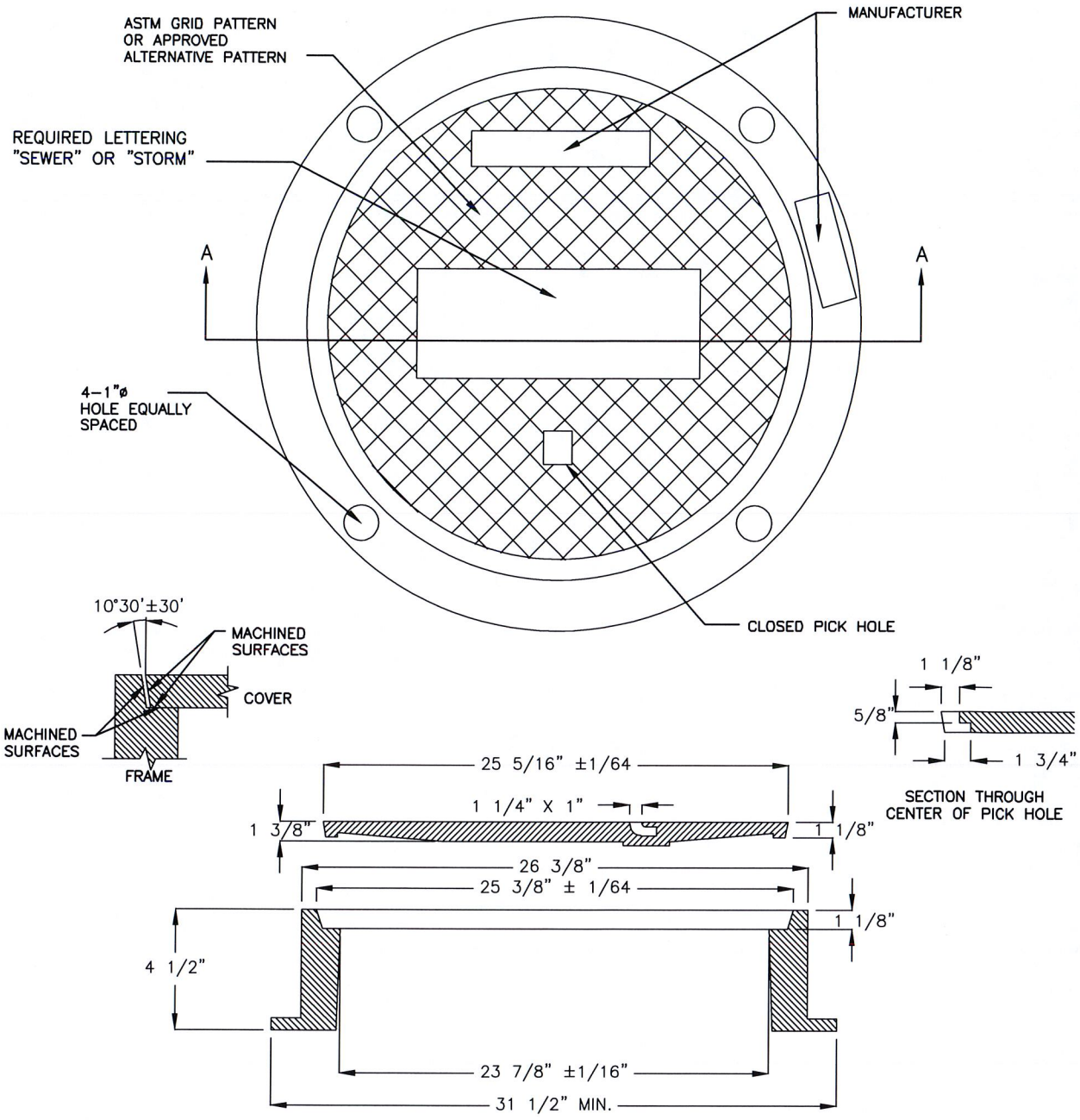

SECTION A–A

NOTES:

1. FRAME AND COVER SHALL BE D&L FOUNDARY A–1024 OR EQUAL WITH "SEWER" LABELING.
2. ALL CASTINGS TO CONFORM TO ASTM A48, CLASS 30.
3. FRAME AND COVER TO MEET HS–20 LOAD SPECIFICATIONS.
4. MACHINED HORIZONTAL AND VERTICAL BEARING SURFACES NOT TO EXCEED 1/64" TOLERANCE.
5. EQUIVALENT DUCTILE IRON FRAME AND COVERS MAY BE USED,
6. LOCKING COVER TYPE FRAME AND COVERS SHALL BE USED IN EASEMENT AREAS UNLESS OTHERWISE APPROVED.

City of Winters *PUBLIC WORKS DEPARTMENT*	DATE: DEC 2015
GRAY IRON STANDARD MANHOLE FRAME & COVER	SHEET # 1 OF 1
CITY ENGINEER APPROVED *Nicholas J. Ponticello* P.E. NO. 49584	DRAWING #: 7–2

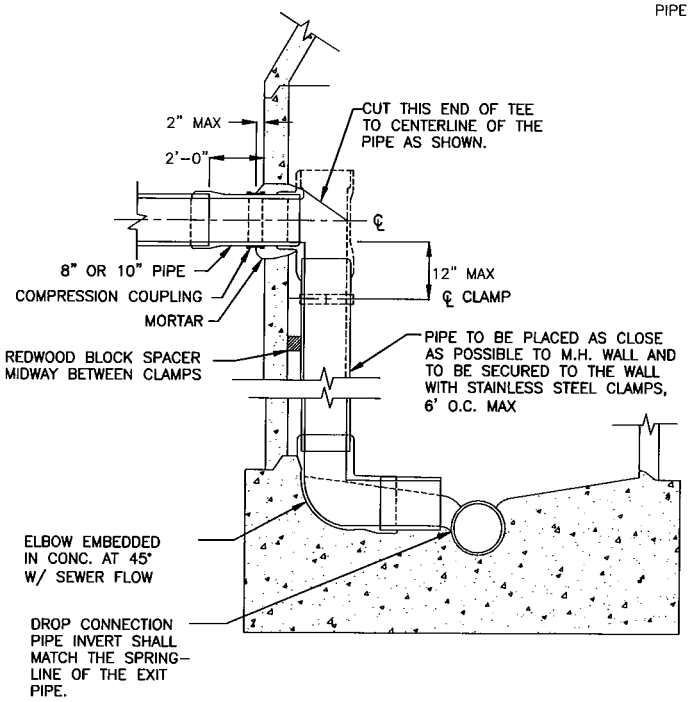

INSIDE DROP CONNECTION

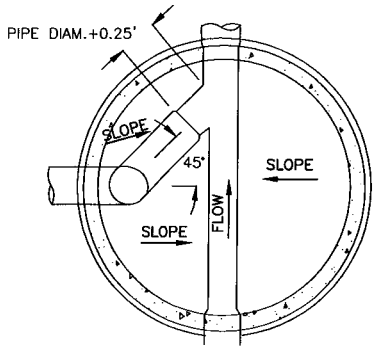

INSIDE DROP – PLAN

NOTES:

1. ALL INSIDE DROP PIPING TO BE A.B.S. OR PVC SDR-26.
2. CEMENT ALL JOINTS.
3. DROP CONNECTION PIPE AND FITTINGS TO BE SAME SIZE AS ENTERING PIPE.
4. CLAMPS TO BE 1-1/2" X 12 GA STAINLESS STEEL. ANCHORED TO M.H. WALL WITH 2-1/2" CADMIUM PLATED BOLTS.
5. ONLY INSIDE DROPS ARE ALLOWED.
6. MANHOLE BARREL SIZE MAY NEED TO BE INCREASED TO ACCOMMODATE INSIDE DROP.

City of Winters *PUBLIC WORKS DEPARTMENT*	DATE: DEC 2015
DROP CONNECTIONS	SHEET # 1 OF 1
CITY ENGINEER APPROVED *Nicholas J. Ponticello* P.E. NO. 49584	DRAWING #: 7-3

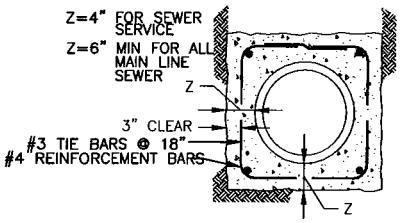

CONCRETE ENCASEMENT

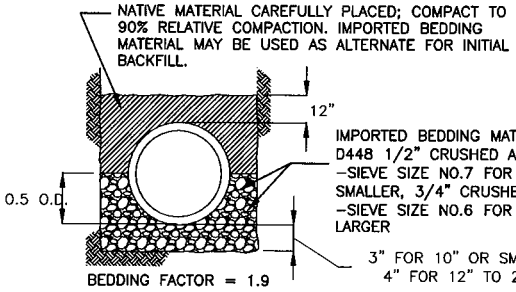

TYPE II
(SEE NOTE 6)

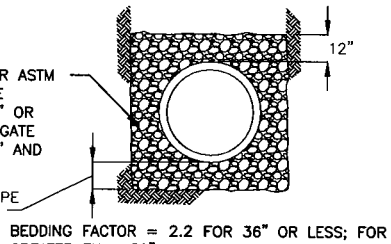

BEDDING FACTOR = 2.2 FOR 36" OR LESS; FOR GREATER THAN 36" DIA. FIELD CONDITION ONLY (SEE NOTE 3).

TYPE II ALTERNATE

GENERAL NOTES:

1. SEE SECTION 7-7 FOR BACKFILL LIMITS.
2. MINIMUM DEPTH OF BEDDING AND MATERIAL UNDER PIPE BELLS SHALL BE 1 1/2 INCHES.
3. DESIGN METHOD NO.38 AS PUBLISHED BY THE AMERICAN CONCRETE PIPE ASSOCIATION SHALL BE THE BASIS FOR THE CALCULATIONS MAXIMUM ALLOWABLE BEDDING FACTORS WHERE VARIANCE IS NEEDED.
4. TYPE III AND IV MAY BE USED ONLY WHEN CONSTRUCTION CONDITIONS ENCOUNTERED IN THE FIELD HAVE RESULTED IN THE ALLOWABLE TRENCH WIDTH FOR TYPE II AND TYPE II ALTERNATE BEING EXCEEDED. WRITTEN APPROVAL OF THE ENGINEER IS NECESSARY.
5. FOR REINFORCED CONCRETE, P IS THE PERCENTAGE OF THE AREA OF TRANSVERSE STEEL TO THE AREA OF CONCRETE ABOVE THE TOP OF THE PIPE BARREL. USE WIRE MESH OR UNIFORMLY DISTRIBUTED SMALL DIAMETER REBAR.
6. FOR ALL FLEXIBLE (NON-RIGID) PIPE, IMPORTED MATERIAL MUST BE USED FOR BEDDING AND INITIAL BACKFILL TO 12 INCHES OVER PIPE BELL.

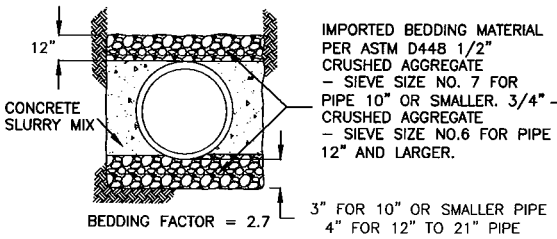

TYPE III
(SEE NOTE 4)

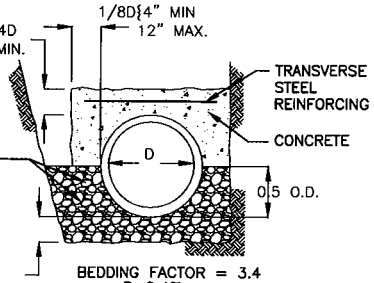

TYPE IV
(SEE NOTES 4 & 5)

(CONCRETE MUST EXTEND FROM PIPE TO THE TRENCH WALLS. TYPE III NOT ALLOWED WHERE SOILS ARE EXPANSIVE)

City of Winters *PUBLIC WORKS DEPARTMENT*	DATE: DEC 2015
SEWER PIPE BEDDING AND INITIAL BACKFILL	SHEET # 1 OF 2
CITY ENGINEER APPROVED Nicholas J. Ponticello P.E. NO. 49584	DRAWING #: 7-4

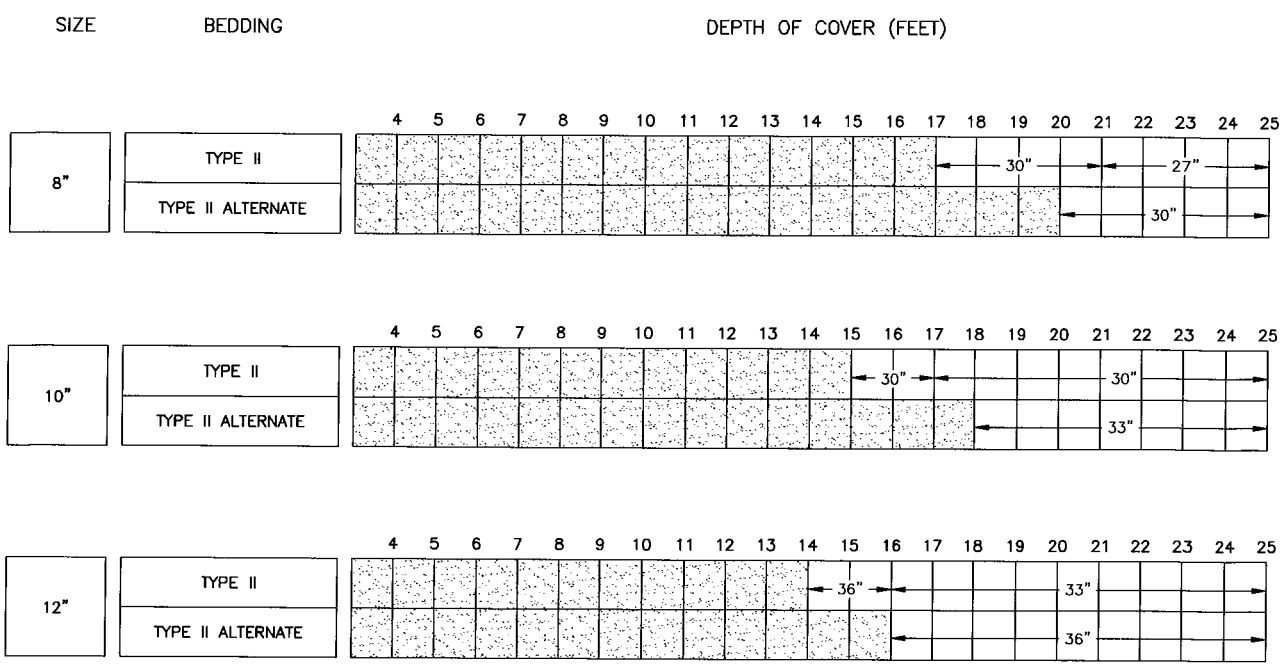

NO LIMIT ON TRENCH WIDTH

30" MAXIMUM TRENCH WIDTH MEASURED AT THE TOP OF THE PIPE.

NOTE:
CALCULATIONS BASED IN SOIL WT.=120^3 LB/FT
SATURATED CLAY (KU' = 0.110)

City of Winters *PUBLIC WORKS DEPARTMENT*	DATE: DEC 2015
MAXIMUM TRENCH WIDTH FOR EXTRA STRENGTH VCP	SHEET # 2 OF 2
CITY ENGINEER APPROVED Nicholas J. Ponticello P.E. NO. 49584	DRAWING #: 7-4

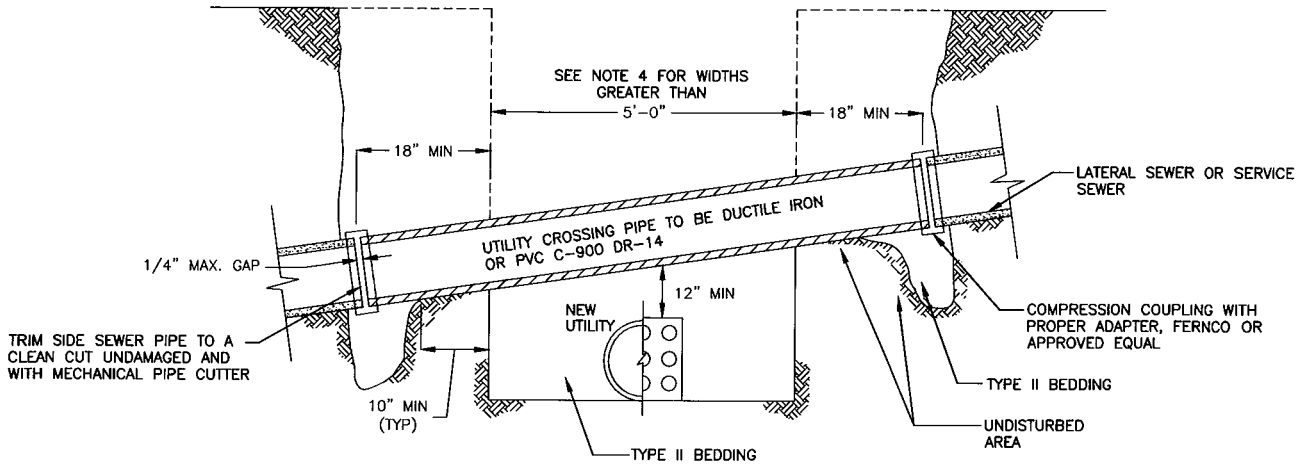

NOTES:

1. ALL LINES ARE TO BE PROTECTED IN PLACE. THIS DETAIL SHALL APPLY WHENEVER THE MAIN COLLECTOR OR LATERAL SEWER SERVICE IS CUT OR DAMAGED WHEN NEW CONSTRUCTION POSSES BENEATH THESE LINES, AND MAY ONLY BE USED WHEN DIRECTED TO DO SO BY THE CITY ENGINEER.
2. INSIDE DIAMETER OF UTILITY CROSSING PIPE TO BE THE SAME AS THE PIPE TO WHICH IT CONNECTS.
3. ALTERATION OF SEWER GRADES WILL BE PERMITTED ONLY AFTER WRITTEN PERMISSION HAS BEEN RECEIVED FROM THE CITY ENGINEER AND SHALL COMPLY WITH SHEET 2.
4. WHENEVER THE SPAN, WHETHER CAUSED BY TRENCH WIDTH OR CROSSING ANGLE OF THE UTILITY CROSSING PIPE EXCEEDS 5'-0" PLACE TYPE II ALTERNATE BEDDING TO 12" ABOVE THE NEW UTILITY AND 18" EACH SIDE OF ITS CENTER LINE.
5. ANY NEW UTILITY WITH 6" OR LESS CLEARANCE SHALL PLACE A COMPRESSIBLE MATERIAL (STYROFOAM OR EQUIVALENT) BETWEEN THE LINES.

City of Winters *PUBLIC WORKS DEPARTMENT*	DATE: DEC 2015
UTILITY CROSSING	SHEET # 1 OF 2
CITY ENGINEER APPROVED Nicholas J. Ponticello P.E. NO. 49584	DRAWING #: 7-5

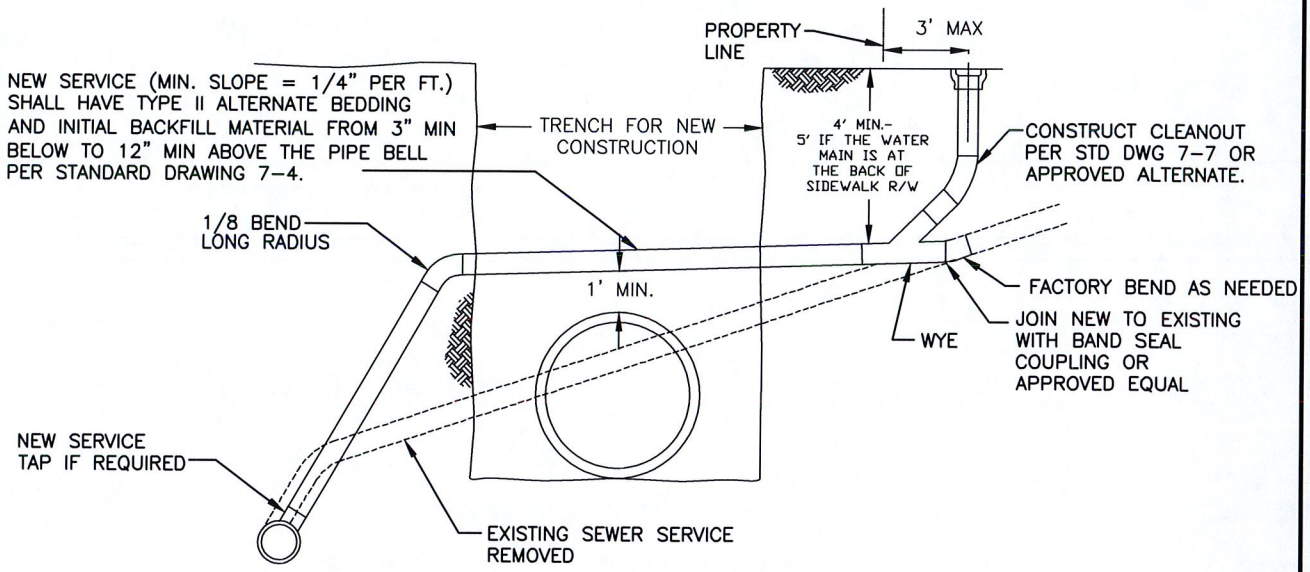

SEWER SERVICE RELOCATION OPTION OVER NEW CONSTRUCTION

(WATER MAIN UNDER NOT ALLOWED)

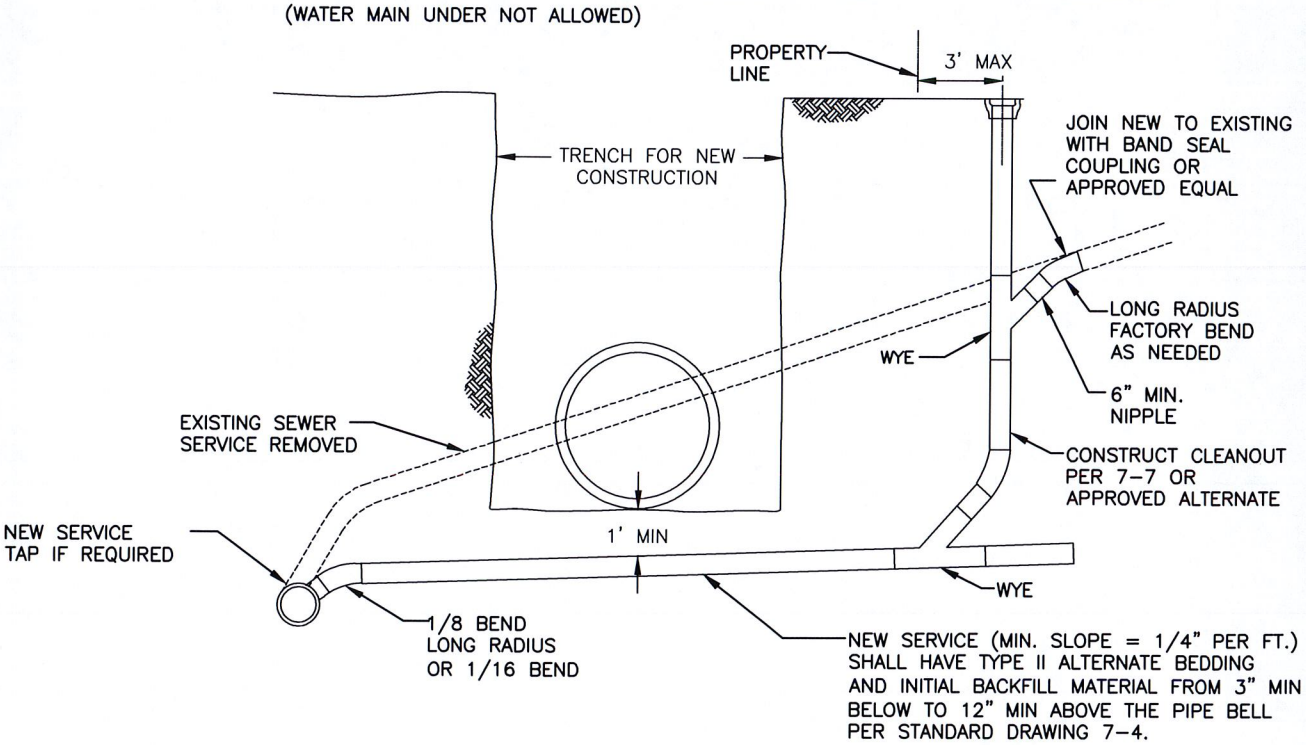

SEWER SERVICE RELOCATION OPTION UNDER NEW CONSTRUCTION

(WATER MAIN OVER SEWER SERVICE)

NOTE:

IF NEITHER OF THESE OPTIONS IS AVAILABLE, THE ELEVATION OF THE NEW FACILITY WILL NEED TO BE ADJUSTED TO ACCOMMODATE ONE OF THESE OPTIONS.

City of Winters *PUBLIC WORKS DEPARTMENT*	DATE: DEC 2015
SEWER SERVICE REPLACEMENT/REPAIR	SHEET # 2 OF 2
CITY ENGINEER APPROVED *Nicholas J. Ponticello* P.E. NO. 49584	DRAWING #: 7-5

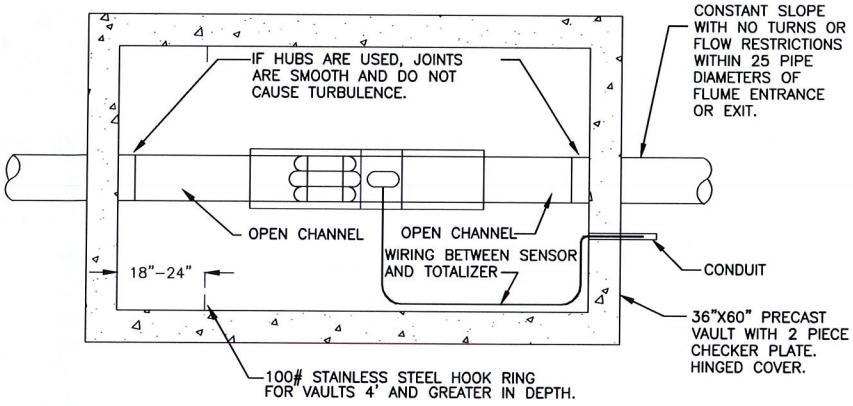

NOTES:

1. LOCATE VAULT AS CLOSE AS PRACTICAL TO THE SOURCE STRUCTURE. IF LOCATED IN A PARKING LOT, THE VAULT IS TO BE PROTECTED FROM TRAFFIC WITH STEEL POSTS OR INSTALLED FLUSH WITH TRAFFIC RATED H–20 OR BETTER LID MARKED "NO PARKING".
2. LID TO BE SEALED STYLE.
3. VAULT SIZE TO BE INCREASED FOR 10" AND ABOVE PIPES.
4. IF FLOW PACED SAMPLING, A CABLE FOR CITY USE (TO ALSO DO FLOW PACED SAMPLING) SHALL BE PROVIDED. CONNECTORS SHOULD BE PROTECTED FROM ENVIRONMENT IF NECESSARY (CAPS FOR PREVENTING CORROSION).

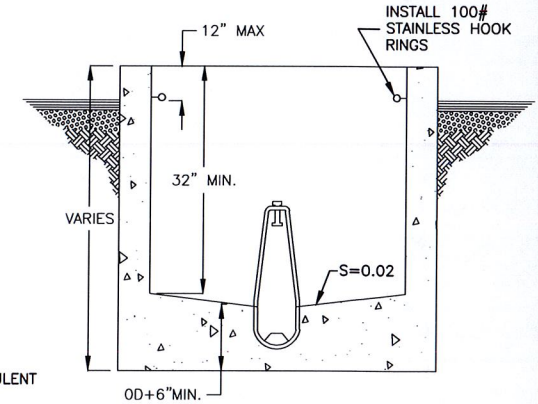

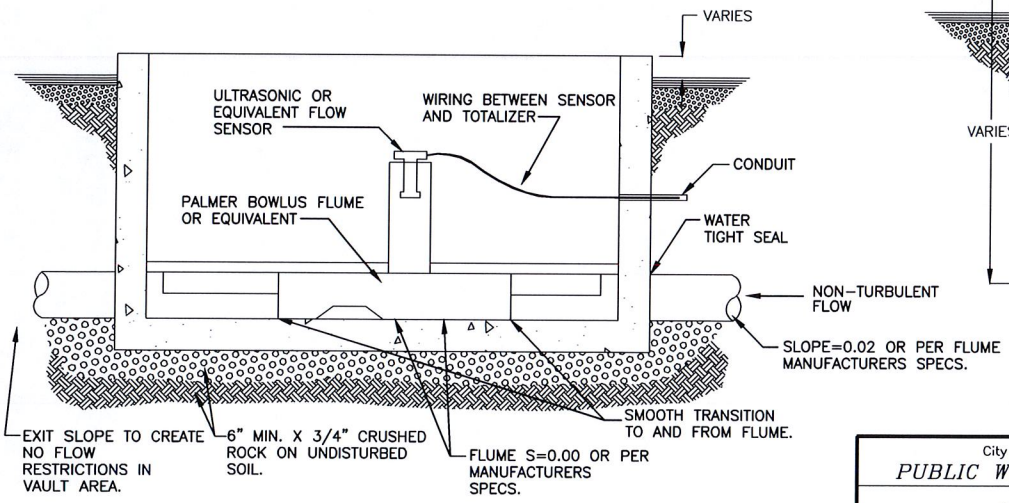

City of Winters *PUBLIC WORKS DEPARTMENT*	DATE: DEC 2015
SAMPLING VAULT	SHEET # 1 OF 1
CITY ENGINEER APPROVED *Nicholas J. Ponticello* P.E. NO. 49584	DRAWING #: 7–6

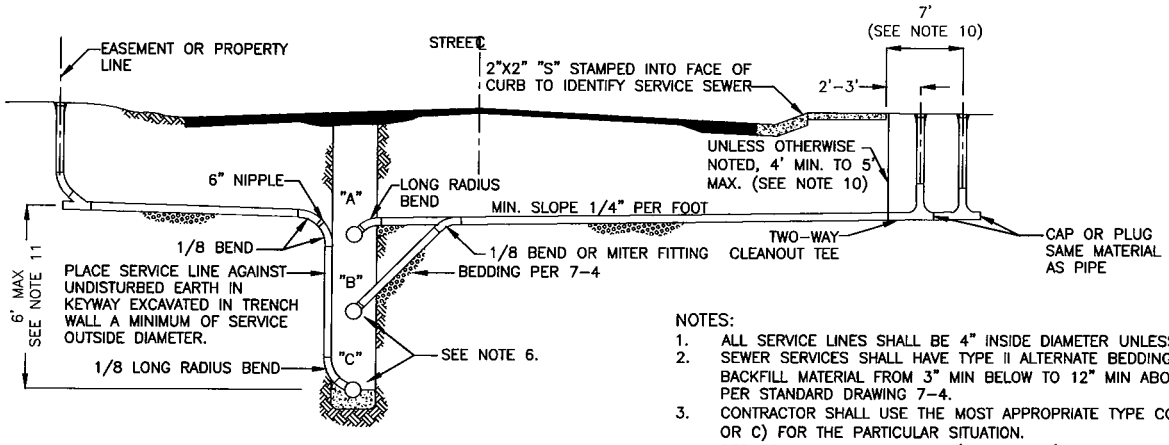

ELEVATIONS

ALTERNATE ABS SERVICE SEWER CONNECTION TO VCP OR PVC

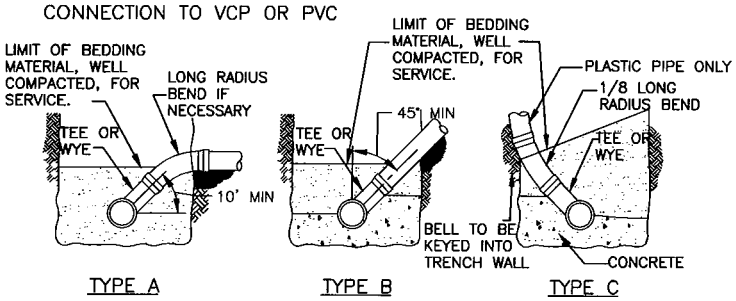

TYPE A TYPE B TYPE C

CONNECTION DETAILS

NOTES:

1. ALL SERVICE LINES SHALL BE 4" INSIDE DIAMETER UNLESS OTHERWISE NOTED.
2. SEWER SERVICES SHALL HAVE TYPE II ALTERNATE BEDDING AND INITIAL BACKFILL MATERIAL FROM 3" MIN BELOW TO 12" MIN ABOVE THE PIPE BELL PER STANDARD DRAWING 7-4.
3. CONTRACTOR SHALL USE THE MOST APPROPRIATE TYPE CONNECTION (A, B, OR C) FOR THE PARTICULAR SITUATION.
4. SERVICE SEWER SHALL HAVE 4' MINIMUM 5' MAXIMUM COVER AT PROPERTY LINE EXCEPT AS REQUIRED IN NOTES 5 AND 10, BELOW.
5. WHEN THE COLLECTOR SEWER DEPTH IS SUCH THAT MINIMUM COVER AT PROPERTY LINE CANNOT BE MET, THE MINIMUM SLOPE OF 1/4" PER FOOT SHALL GOVERN THE COVER.
6. FOR TYPE B AND C CONNECTIONS, PLACE CONCRETE SADDLE FULL WIDTH OF TRENCH AND 12" LONG UNDER THE TEE OR WYE, THE FITTING, AND UNSUPPORTED PIPE.
7. MINIMUM SPECIFIED COVER AT THE PROPERTY LINE SHALL BE MEASURED FROM FINISHED GROUND SURFACE OR EDGE OF ADJACENT ROADWAY, WHICHEVER IS LOWER.
8. A SPECIFIC ELEVATION AT THE PROPERTY LINE, WHEN SHOWN ON THE PLANS OR DESIGNATED BY THE ENGINEER, SHALL GOVERN.
9. MITER BENDS SHALL NOT EXCEED 45°.
10. MINIMUM DEPTH OF COVER TO BE 5'-0" AND MAXIMUM 6'-0" WHERE JOINT TRENCH (UTILITY, PHONE, CATV) IS TO BE INSTALLED AT BACK OF SIDEWALK AS PART OF THE SUB-DIVISION IMPROVEMENTS. IN SUCH CASES, SERVICE IS TO BE EXTENDED TO 7' BACK OF SIDEWALK; CLEANOUT TO GRADE TO REMAIN 2' BACK OF SIDEWALK AND A SECOND CLEANOUT TO BE INSTALLED ON END OF EXTENSION FOR TEMPORARY USE UNTIL HOUSE CONNECTION IS MADE.
11. FOR VERTICAL RISE OF GREATER THAN 6', EITHER CONSTRUCT A CASE II CHIMNEY AT THE MAIN PER STD PLAN 220-2 OR A TYPE B CHIMNEY AT THE PROPERTY LINE.PER APWA "GREENBOOK" STD PLAN 222-1 FOR DEPTHS OVER 6 FT.

City of Winters *PUBLIC WORKS DEPARTMENT*	DATE: DEC 2015
SEWER SERVICES	SHEET # 1 OF 3
CITY ENGINEER APPROVED Nicholas J. Ponticello P.E. NO. 49584	DRAWING #: 7-7

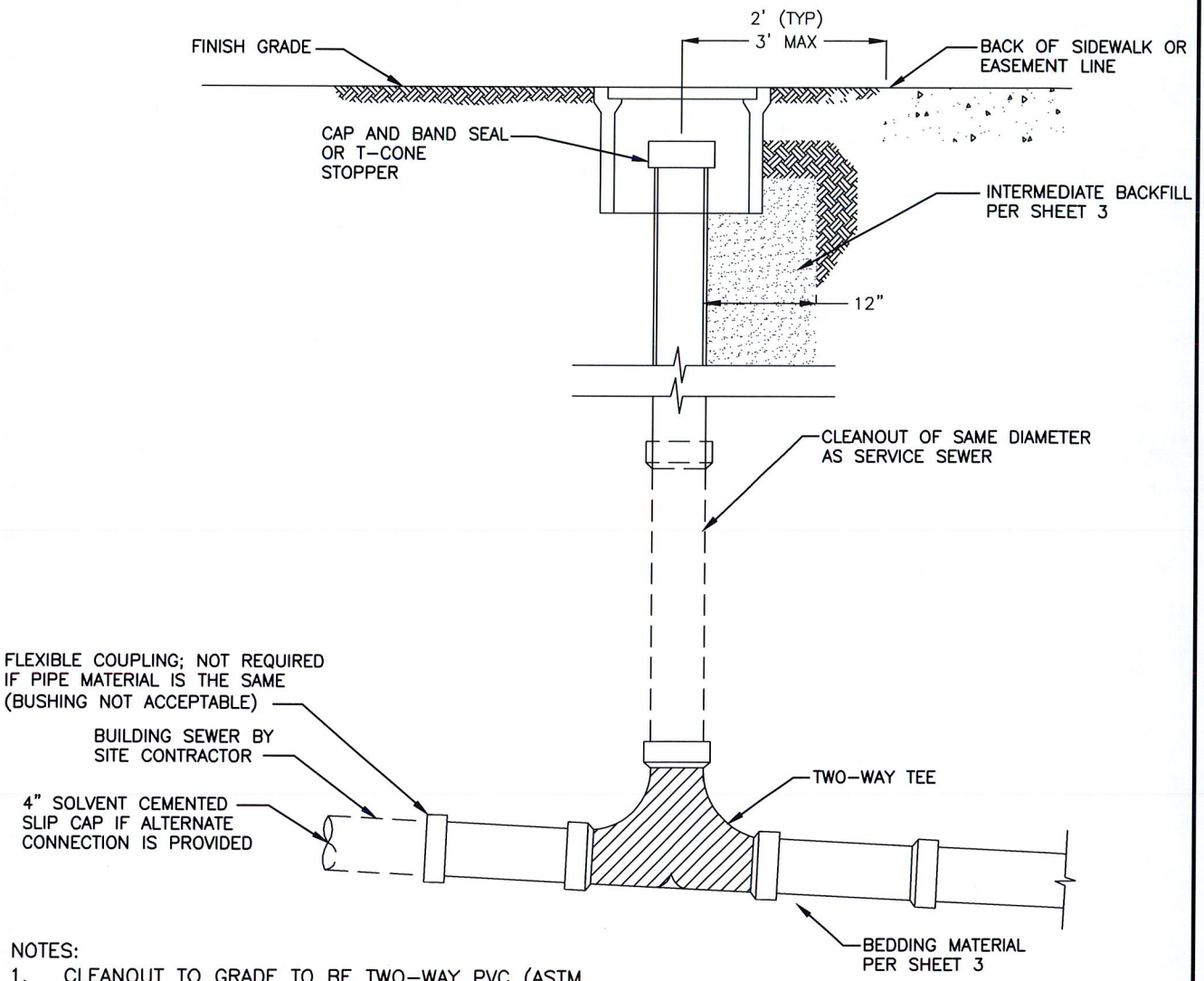

NOTES:

1. CLEANOUT TO GRADE TO BE TWO-WAY PVC (ASTM D2665) OR ABS (ASTM D2661) WITH SOLVENT WELD JOINTS.
2. FOR 4" SERVICES IN NON-TRAVEL WAYS, INSTALL ROUND NON-TRAFFIC TYPE CONCRETE OR FIBER REINFORCED POLYMERIC VALVE BOX AND COVER MARKED "SEWER". BOX INSIDE DIAMETER TO BE A MINIMUM OF 7" AND A MAXIMUM OF 10".
3. FOR SERVICES 4" AND 6" OR LARGER IN CONCRETE OR TRAVEL WAYS, INSTALL ROUND CONCRETE TRAFFIC TYPE VALVE BOX WITH CAST IRON COVER AND A CONCRETE COLLAR CONFORMING TO THE REQUIREMENTS OF STD DWG 7-8. COVER TO BE MARKED "SEWER".
4. IF A JOINT TRENCH IS TO BE INSTALLED AT THE BACK OF SIDEWALK, EXTEND SERVICE TO 7' BACK OF SIDEWALK; CLEANOUT TO GRADE TO REMAIN 2' TO 3' FROM BACK OF SIDEWALK AND A SECOND CLEANOUT TO BE INSTALLED ON THE END OF THE EXTENSION 7' BACK OF SIDEWALK.
5. SEWER SERVICE COMPLETE WITH CLEANOUT AS SHOWN SHALL BE CONSTRUCTED WITH THE PUBLIC IMPROVEMENTS.

= MATERIAL SAME AS MAIN

City of Winters *PUBLIC WORKS DEPARTMENT*	DATE: DEC 2015
ABS OR PVC SERVICE TWO-WAY CLEANOUT TO GRADE	SHEET # 2 OF 3
CITY ENGINEER APPROVED Nicholas J. Ponticello P.E. NO. 49584	DRAWING #: 7-7

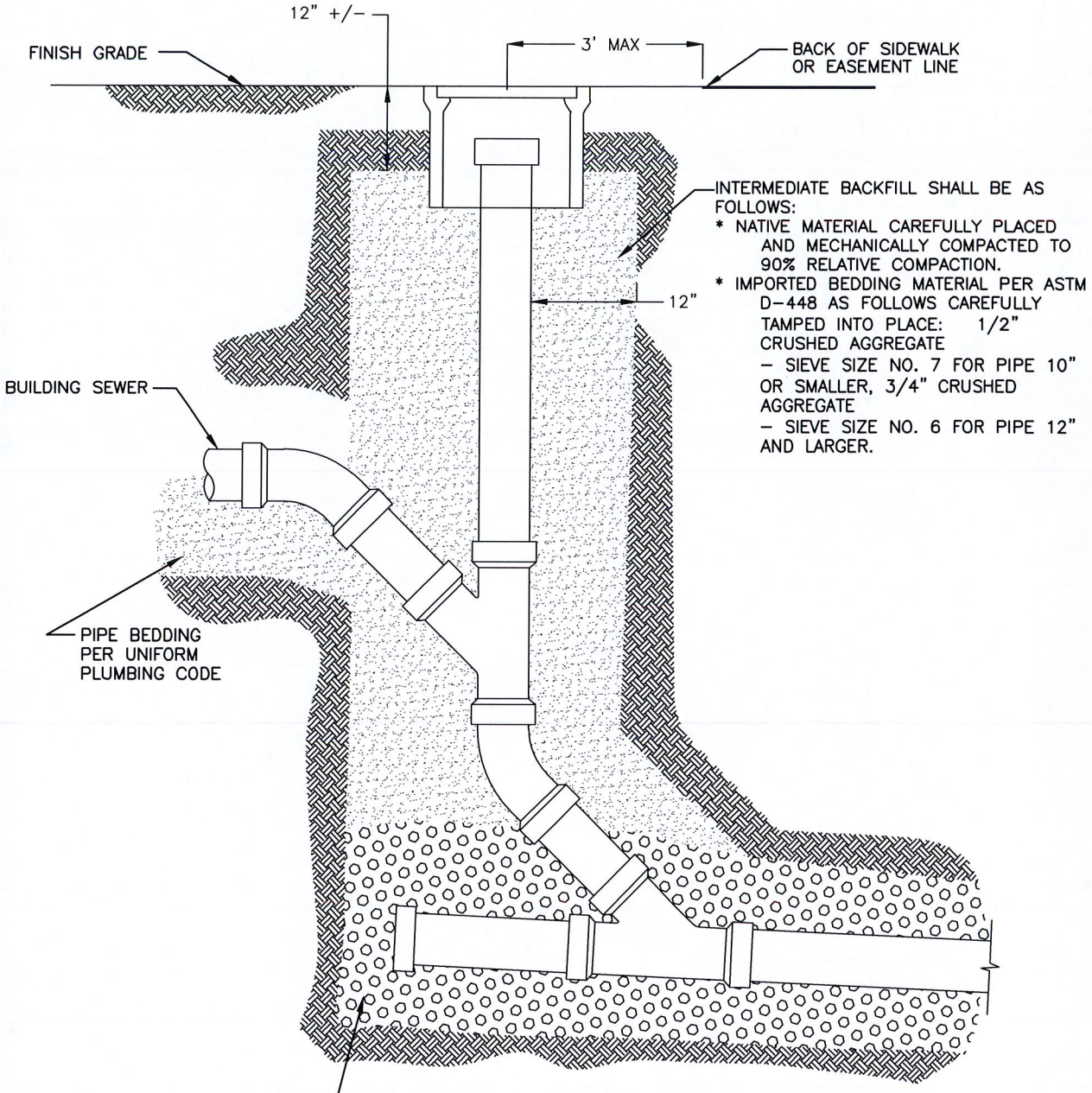

City of Winters *PUBLIC WORKS DEPARTMENT*	DATE: DEC 2015
ABS OR PVC SERVICE CLEANOUT BEDDING & BACKFILL	SHEET # 3 OF 3
CITY ENGINEER APPROVED Nicholas J. Ponticello P.E. NO. 49584	DRAWING #: 7-7

NOTES:

1. D&L SUPPLY MODEL H-6521 OR EQUAL
2. SIZE COVER BOX SO PVC PIPING FITS INSIDE BOX WALL WITHOUT BINDING.
3. WHEN SIZES DO NOT MATCH, PROVIDE GAP AS SHOWN BELOW AND CONNECT WITH FLEXIBLE CAULDER TYPE COUPLING.
4. LID TO BE LABELED "SEWER"

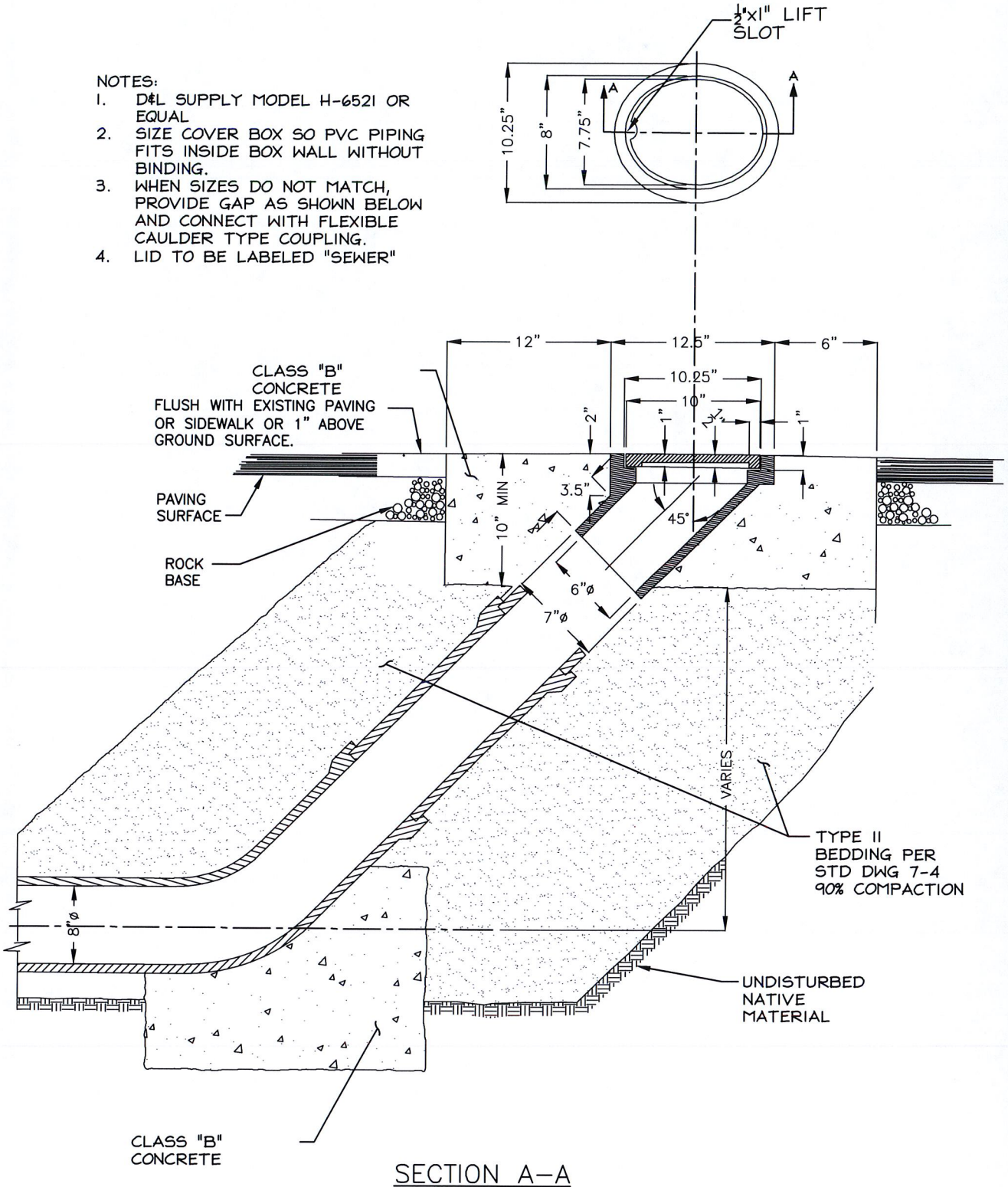

SECTION A–A

City of Winters *PUBLIC WORKS DEPARTMENT*	DATE: DEC 2015
FLUSHING BRANCH	SHEET # 1 OF 1
CITY ENGINEER APPROVED *Nicholas J. Ponticello* P.E. NO. 49584	DRAWING #: 7–8

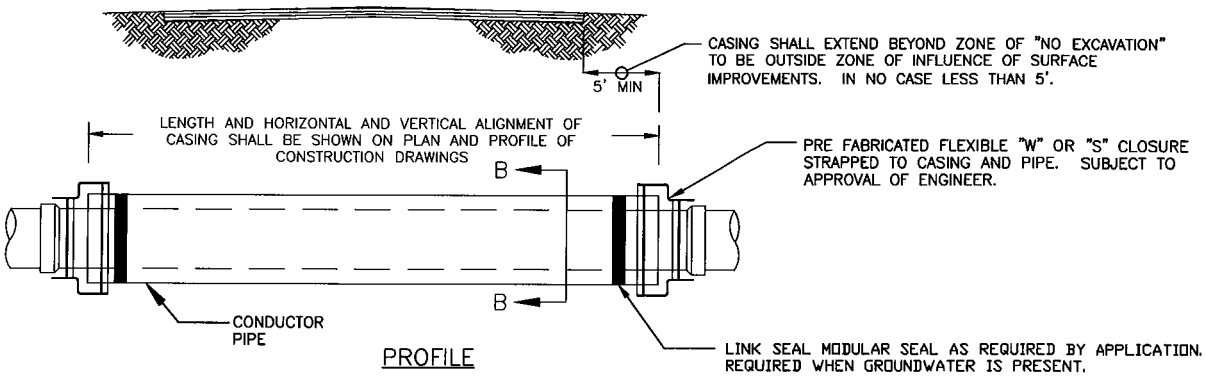

PROFILE

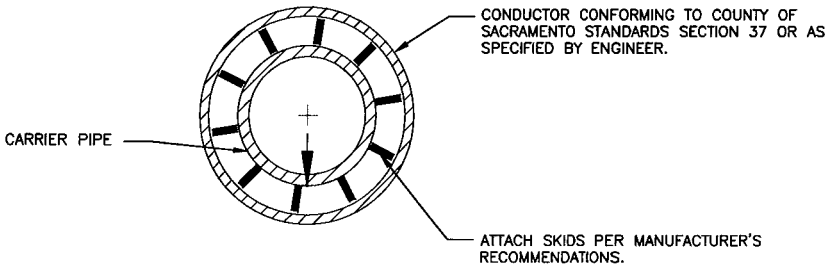

SECTION B–B

NOTES:

1. JACKING OPERATIONS AND MATERIALS SHALL CONFORM TO COUNTY OF SACRAMENTO STANDARD CONSTRUCTION SPECIFICATIONS SECTION 37.
2. CASING DIAMETER AND WALL THICKNESS PER CONTRACT SPECIFICATIONS. IN NO CASE SHALL WALL THICKNESS BE LESS THAN 3/8".
3. CONDUCTOR PIPE DIAMETER SHALL BE AT LEAST 9" GREATER THAN THE O.D. OF THE CARRIER PIPE.

City of Winters *PUBLIC WORKS DEPARTMENT*	DATE: DEC 2015
JACKED CASING DETAIL	SHEET # 1 OF 1
CITY ENGINEER APPROVED Nicholas J. Ponticello P.E. NO. 49584	DRAWING #: 7–9

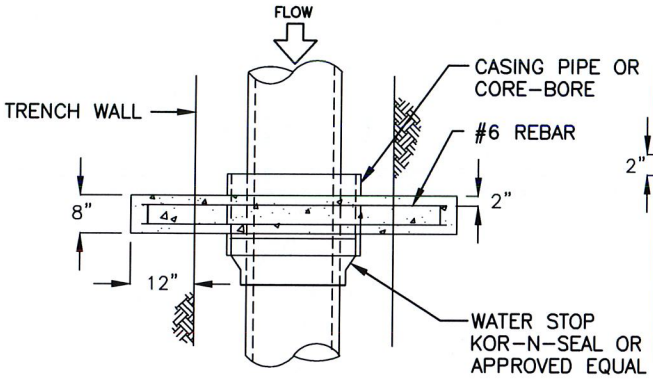

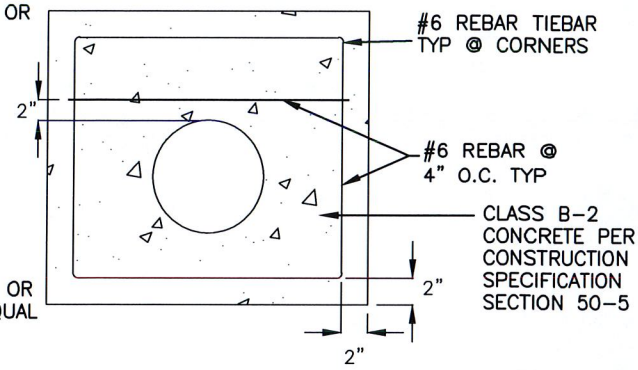

REBAR DETAIL

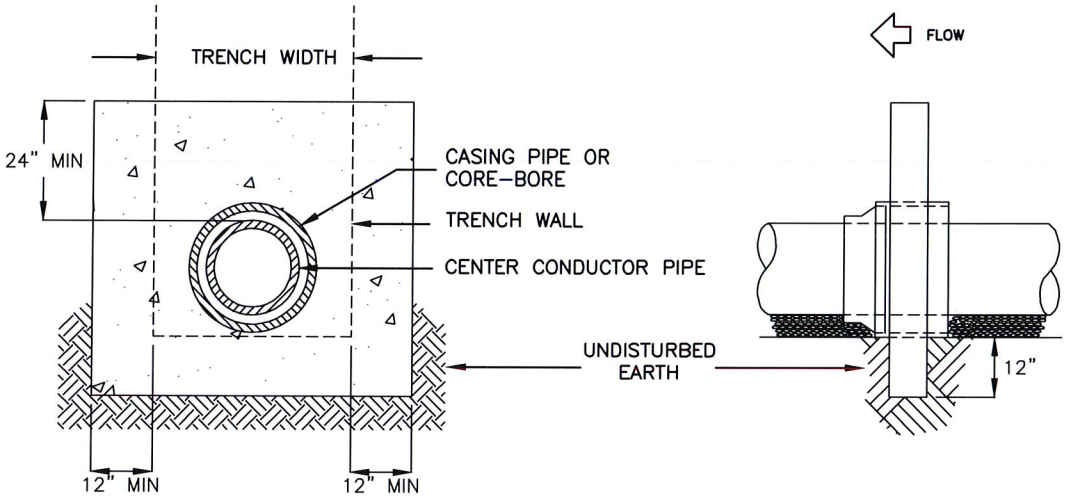

COLLECTOR SIZE	CONDUCTOR PIPE SIZE
8"	12" VCP
10"	15" PVC SDR 26
12" TO 21"	CORE-BORE THE APPROPRIATE SIZE HOLE IN THE DAM

NOTES:

TOP OF DAM TO EXTEND INTO INTERMEDIATE BACKFILL 12" MINIMUM OR TOP OF GROUND WATER HGL.

City of Winters *PUBLIC WORKS DEPARTMENT*	DATE: DEC 2015
CONCRETE DAM DETAIL	SHEET # 1 OF 1
CITY ENGINEER APPROVED *Nicholas J. Ponticello* P.E. NO. 49584	DRAWING #: 7-10

SECTION 8

WATER SYSTEMS DESIGN

8-1 INTRODUCTION

These improvement standards govern the design of all water systems intended for operation and maintenance by the City of Winters. All new water systems shall also comply with the City of Winters Water System Master Plan.

8-2 INTENT OF WATER SYSTEM IMPROVEMENT STANDARDS

The intent of these water system improvement standards is to provide water systems that reliably and safely convey water at a reasonable capital cost and to provide water systems that minimize operation and maintenance costs.

8-3 DEFINITIONS

When the following terms or titles are used in these water system improvement standards, or in any document or instrument where these standards govern, the intent and meaning shall be as herein defined:

AWWA - American Water Works Association.

Recycled Water - Non-potable water for irrigation use only.

Water System - Refers to potable, raw water, and recycled (reclaimed) water systems.

8-4 APPLICABLE STANDARDS

The most current requirements of the following agencies and standards shall apply to design of water systems. In case of conflict between the requirements of these water system improvement standards and the agencies and documents listed below, these improvement standards shall govern.

- Environmental Protection Agency Drinking Water Regulations.
- Laws, codes, and Standards of the State of California, Department of Health Services relating to Domestic Water.
- Rule and regulations, as appropriate, of Yolo County, Department of Health Services.
- Standard Construction Specifications of the City of Winters.
- General Order No. 103 of the California Public Utilities Commission.
- Title 17, Chapter V, Sections 7583-7622, California Administrative Code, and City Ordinance 93-02 regarding cross-connections and backflow prevention.
- Uniform Fire Code.

8-5 IMPROVEMENT PLAN SUBMITTAL

Improvement plans shall meet the requirements of Section 2 - General Requirements of these Improvement Standards. If improvement plans for commercial, industrial, or apartment developments, or street improvements will have landscaping, two complete sets of landscape plans must also be submitted. Commercial, Industrial, or Apartment developments must also submit a completed Cross Connection Control Questionnaire.

8-6 APPROVAL OF IMPROVEMENT PLANS

The City Engineer will approve water system improvements concurrently with any street, sewer, storm drainage or other improvements shown on the Improvement Plans. The following must occur before the plans can be approved:

- The Fire Department must approve and sign the improvement plans.
- The location of all wells in use and all abandoned wells must be shown on the improvement plans, and properly destroyed in accordance with the requirements of the Yolo County Environmental Health Department. Copies of well destruction permits for all destroyed wells must be provided to the City before obtaining final acceptance of any public improvements.

8-7 IMPROVEMENT PLAN REVISION

All plan revisions that affect a water system to be maintained and operated by City of Winters shall be approved and signed by the City Engineer prior to construction.

8-8 CONNECTION PERMITS AND FEES

A water connection permit shall be obtained for each connection to the water system. Contact the City Engineer for information concerning fees.

8-9 WATER QUALITY

The quality of the potable water supplied or delivered into any portions of the city system will conform to the Environmental Protection Agency Drinking Water Act, California Water Code, California Health & Safety Code, and the State Water Resource Control Board Law Book, and other regulations as they apply to domestic water supply, quality and security.

8-10 WATER PRESSURE

Water distribution systems shall be designed so that normal operating pressures at service connections to the distribution system are no less than 50 pounds per square inch (psi) and no more than 100 psi. During periods of maximum day domestic demand plus fire demand, the pressure shall not be less than 20 psi at the location of the fire flow.

8-11 WATER DEMAND

For the design of water distribution systems serving single family residential areas, assume the water demand is 0.6 gallon per minute per residential connection (maximum hour demand) plus fire flow. For the design of water distribution systems serving commercial areas, water demand shall be determined in consultation with the City Engineer. The City Engineer may require that some distribution mains be upsized in accordance with approved Water Master Plan and Technical Memoranda

8-12 FIRE FLOWS

Required fire flows shall be determined by the Uniform Fire Code, the fire protection district having jurisdiction, and the City of Winters. In accordance with the General Plan Policy VII.C.2., minimum fire flows shall not be less than the following:

Development Category	Gallons per Minute
Single-Family Residential	1,500
Multi-Family Residential	1,500
Central Business District	2,000
Industrial/Other Business District	3,000

8-13 WELLS, TREATMENT PLANT AND STORAGE FACILITY DESIGN

The City Engineer will either design or provide design oversight of wells, treatment plants, booster pumping plants, and storage facilities.

In general, all developments must have a minimum of two (2) sources of water. If adequate elevated or ground level storage is provided, a single source of water system may be acceptable upon approval by the City Engineer and the local fire district.

Site selection for the above mentioned facilities shall be approved by the City Engineer and meet the requirements of the City and the State Water Resource Control Board.

All pump stations shall include Supervisor Control and Data Acquisition (SCADA) with real-time communication to the City's master computer and alarm auto-dialer system. The real-time communication system shall be via the City's existing radio network.

All automated controllers, antennae and radios shall be of a make and model 100% compatible with the City's SCADA system. The system shall be approved by the City and the City reserves the right to specify the equipment to be installed in the pump station.

The City shall make all necessary modification to the master computer and alarm auto-dialer to incorporate the new station and the cost of these modifications shall be borne by the developer.

8-14 DISTRIBUTION MAIN DESIGN

Sizing of distribution mains shall be such that the normal pressures stated in Section 8-10 and the minimum requirements as stated below for distribution main spacing and sizing are maintained. The developer shall consult with the City's Water Master Plan for initial sizing and location of distribution mains. Final sizing and location shall be as approved by the City Engineer.

The Hazen-Williams formula shall be used in the hydraulic study of the system, using a "C" value of 125 for cement-lined pipe, polyvinyl chloride pipe and for ductile iron pipe.

A Hardy-Cross hydraulic analysis of any proposed distribution system shall be provided upon request. In design of the system, the maximum assumed delivery from any hydrant of a type conforming to current Standard Construction Specifications shall be assumed to be limited to 1,500 gallons per minute.

A. Distribution Main Design Plan Requirements

Plans for the construction of water mains whether in conjunction with other improvements or for a water project only, shall conform to the following standards, as well as other standards contained in the General and Plan Sheet Requirements of these Improvement Standards.

1. The distribution main shall be shown on the Street Plan and Profile sheets and for non-street areas on separate plan and profile sheets as required.

2. Details of distribution mains crossing other utilities or unusual alignments will be provided if deemed necessary by the City Engineer.

3. Water mains shall be Polyvinyl Chloride or Ductile Iron mains conforming to the Standards Specifications. A sand bedding shall be provided around all water mains (6 inches minimum all directions), regardless of pipe material type. If existing soil is too porous to hold sand, geotextile fabric placed on the trench bottom and covered with 6 inches of sand may be used. Geotextile fabric shall comply with Caltrans Standard Specifications and as approved by the City Engineer. Ductile Iron mains shall be encased in 8 mil polyethylene encasement in accordance with AWWA C 105.

   Bedding and backfill for both ductile iron pipe and polyvinyl chloride pipe shall be compacted to 90% relative compaction. Grooves shall be dug in the pipe bedding to accommodate pipe bells, fittings, and joints so that the pipe is continuously supported by the bedding material.

4. Stationing for all fittings, shut off valves, air release/vacuum valves, and in line blow-off valves shall be called-out in the profile view of the improvement plan sheets. Elevations shall be called-out at all changes in pipe elevation. Horizontal alignment changes shall be called out on the plan view.

5. Commercial, industrial, and apartment Improvement Plans with a water easement shall have a note that states, "Utilities may not be located within water easement(s) except if the utility crosses the water easement within 20 degrees of perpendicular to the water main."

B. Distribution Main Location

All water distribution mains shall be installed within public rights-of-way or easements.

1. In new subdivisions, the centerline of the water main shall be located six feet north or west of street centerlines within minor and primary streets. If a street loops 180 degrees or more it is not necessary for the water main to cross to the other side of the street to meet this requirement.

2. 2. If it is necessary to install a water distribution main within a private road, the water easement shall be the width of the paving plus one foot each side. Water easements over water distribution mains located on commercial, industrial, or apartment properties shall have a minimum width of 15 feet. The water main shall be centered in the easement.

3. If it is necessary to install a water distribution main within a landscape corridor, then no trees shall be planted within five feet of the water main and the main shall be buried at minimum allowable cover. The water distribution main shall be centered within a 15 foot wide water easement. The landscape plans for the corridor shall be submitted prior to approval of the improvement plans.

4. If a water distribution main is required to be installed between residential homes, the pipe material shall be Class 350 Ductile Iron Pipe, and a 6 inch wide warning tape shall be placed on the backfill. The center of the main shall be centered within a 15 foot wide easement.

5. Minimum horizontal and vertical separation of parallel and crossing water distribution mains, sanitary sewer mains, recycled water mains or other utilities shall be maintained in accordance with California Water Code and approved by the City Engineer.

6. The water distribution main shall be higher than sewer and recycled water main

7. When crossing over a sanitary sewer force main, it shall be specified that the water distribution main be installed a minimum of three (3) feet **above** the sewer line and shall be ductile iron or installed within a ductile iron conductor per Standard Drawing 7-9.

8. Water distribution mains to be installed in public right-of-ways or easements not conforming to Items 1 through 5 above shall be approved by the City Engineer in consultation with other affected utility providers.

C. Distribution Main Layout and Sizing

The distribution system, whenever possible, shall be in grid form so that pressures throughout the system tend to become equalized under varying rates and locations of maximum demand, and to provide system redundancy. The minimum pressures and flows as specified shall govern design of the system. The following conditions are to be considered for the distribution system design:

1. In general, the minimum pipe size shall be eight inches inside diameter for looped systems, and six inches for dead end runs that do not have a fire hydrant at the end, or for all dead end runs less than 50 feet.

2. Where distribution mains are installed in an arterial street, dual mains (one pipeline on each side of the street) may be required.

3. Mains shall maintain a minimum cover of 30-inches (36-inches in rights-of-way 50 feet and greater), and when not avoiding other utilities mains shall have a maximum depth of 60-inches, unless otherwise specified by the City Engineer. Both distances shall be measured from gutter flow-line.

D. Distribution Main Pipe Restraint

Pipes shall be restrained from movement as a result of thrust on the fittings and valves of the water system. Thrust restraint for bends and tees may be accomplished with thrust blocks as described or by means of pipe joint restraining devices as shown in Drawing 8-3. Thrust blocks must be poured against undisturbed soil.

E. Type of Distribution Main Pipe and Pipe Deflection

Pipe used in the construction of water distribution systems shall be Polyvinyl Chloride or Ductile Iron pipe. Only ductile iron pipe shall be used for pipe sizes 12 inches in diameter and greater. Pipe deflection at joints shall not exceed one-half of the manufacturer's

recommended deflection. Deflection and bending of Polyvinyl Chloride pipe shall not exceed the limits described in Drawing 8-9.

F. Distribution Main Valves

Valves clusters shall be placed at all pipe intersections with a valve on each leg of the main. Gate valves shall be used on 12" diameter and smaller mains. Butterfly valves shall be used on all mains larger size mains. Valves shall be placed in between main line intersections at intervals of 500 feet between valves.

8-15 WATER SYSTEM APPURTENANCES

Water system appurtenances include fire hydrants, water service lines, water meters, detector check valves, and back-flow devices.

A. Fire Hydrants and Blow-off Assemblies

Fire hydrants and blow-off assemblies shall be located as follows:

1. Fire hydrants shall be connected to distribution mains only. Fire hydrants shall not be connected to transmission mains.
2. Fire hydrants shall be placed at street intersections wherever possible, and located to minimize the hazard of damage by traffic. They shall have a maximum normal spacing of 300 feet measured along the street frontage in residential and commercial developments, or closer if deemed necessary by the local Fire District. Hydrants located at intersections shall be installed at the curb return. Within residential areas, all other hydrants shall be located on property lines between lots. See Drawing 8-2 specifications and typical installation details.
3. The minimum size main serving a fire hydrant shall be six inches in diameter, however in this situation, the distance from the nearest intersecting main to the hydrant shall not be greater than 50 feet if fire flow requirements are 1500 gpm, or 10 feet if fire flow requirements are greater then 1500 gpm. Not more than one hydrant shall be placed on a six-inch main between intersecting water mains. The pipeline connecting the hydrant and the main shall be a minimum of six-inches in diameter, with a gate valve flange connected to the main.
4. A fire hydrant or four (4)-inch blow-off assembly shall be installed on all permanent dead-end runs including cul-de-sacs. If the local Fire District requires a hydrant at the end of a dead-end run, then a 4-inch Blow-off assembly will not be allowed. Two-inch Blow-off valves shall be used if dead-end runs are temporary. Wherever possible, the blow-off assemblies shall be installed in the street right-of-way, a minimum distance of three (3) feet from the lip of gutter. In no case shall the location be such that there is a possibility of siphoning into the distribution system. See Drawings 8-12, and 8-13 for specifications and typical installation details.

B. Water Service Lines

Service lines from the water distribution main to the property line or edge of easement shall always be installed at the time the main is constructed. Services from mains installed in private roads shall extend one foot beyond the edge of the pavement. Service line criteria shall be as follows:

1. In all new subdivisions, the service line shall be located between 9 inches and 30 inches from the side property line. All new residential construction shall install fire sprinklers.
2. Normal size of a new residential service line shall be one inch (1") diameter. Replacement services for existing residential uses without a fire sprinkler requirement shall use a minimum of one inch (1") diameter service. Schools, commercial, industrial, or multiple-family units with higher water demand shall be provided with larger service lines, subject to approval of the City Engineer. All services shall be installed with a corporation stop at the main and valve at the property line. The property line valve shall be the angle meter stop (2" and smaller services) or a gate valve (services larger than 2").
3. Normal size of a new residential water meter shall be one inch (1") when fire sprinklers are installed within the residence. Replacement meters for existing residential uses without a fire sprinkler requirement shall use a minimum of three quarter inch (¾"). Where a meter that is sized smaller than the service line will prevent adequate fire protection then the appropriate sized meter shall be provided for the application. The City Engineer and Department of Public Works reserves the right to required larger meter sizes.
4. The Contractor shall make all water service taps into existing mains upon application for a permit and payment of the required fees. A note to this effect shall be placed on the plan sheet which details the area that requires such tapping. Application shall be made to City of Winters Public Works Department and the required fees paid at least five (5) days in advance of the time the tap is desired. The Contractor shall perform all work subject to inspection and acceptance by the City Engineer.
5. See the Standard Specifications for allowable materials.
6. The location of all water services shall be permanently marked with a "W" in the face of the concrete curb.

C. **Water Meters**

Water meters shall be installed on all residential, commercial, industrial, multi-family, and irrigation water services. Meter boxes with an idler will be installed by the water main construction contractor. Meters will be installed by the builder after building permits are issued. Meter boxes shall be adjusted, as needed, to final grade by the building contractor. Size of water meter shall not be less than the one-half inch (1/2") less than the size of the service line, unless approved by the City Engineer. See Drawing 8-6 for specifications and typical installation details.

D. **Fire Department Connections**

A backflow prevention device shall be provided for each fire service line into a building, whether residential, commercial or industrial use. See Drawing 8-7 for specifications and typical installation details. The Fire Department will review and approve all connection details. Contact the Fire Department for requirements based on specific uses.

E. **Back-Flow Devices**

Back-flow devices are required in accordance with Title 17, Chapter V, and Sections 7583-7622 of the California Administrative Code. See Drawing 8-8 for specifications and typical installation details.

F. **Air Release/Vacuum Valve Assemblies**

Air release/vacuum valve assemblies are required at high points in a distribution system as determined by the City Engineer. See Drawing 8-14 for specifications and typical installation details.

8-16 RECYCLED WATER AND NON-POTABLE WATER TRANSMISSION MAINS AND DISTRIBUTION MAINS

Recycled water and non-potable water facilities may be required for use in specified areas as determined by the City Engineer. Design flows and demands for recycled and non-potable water systems shall be determined by the City Engineer. Design requirements for recycled water and non-potable water transmission mains and distribution mains are similar to potable water; however, there are special provisions described as follows:

1. To avoid cross connection of the potable and non-potable water systems, recycled water and non-potable facilities shall be clearly marked through appropriate coloring of pipe materials and above ground appurtenances. Coloring shall be purple unless otherwise directed.
2. Since recycled water and non-potable facilities are not specifically addressed in the Standard Construction Specifications, special construction requirements shall be obtained from the City Engineer.
3. Pipe color shall be purple and embossed or integrally stamped/marked "CAUTION: NONPOTABLE WATER - DO NOT DRINK", or "CAUTION: RECYCLED WATER - DO NOT DRINK". Valve and meter boxes shall be colored purple and have the words "NONPOTABLE WATER" stamped into the face.
4. All above ground facilities shall be marked with a sign to caution against drinking water from the recycled water system. All signs shall be made and placed in such a manner as to become a permanent part of the facility or appurtenance. Park sites, large turf areas, and other publicly used areas may require warning signs of the appropriate size as determined by the City Engineer or other regulatory agency.
5. The recycled water system shall maintain a minimum pressure of 40 psi.
6. The recycled and non-potable water mains shall be located on the south and east side of a street (or same side as the sanitary sewer). The recycled and non-potable water mains shall be located at a minimum of four feet from the lip of gutter. The recycled and non-potable water mains and valve actuators will be located in the center of

traffic lanes or on traffic lane lines. A deviation from these criteria may be allowed if approved by the City Engineer in consultation with other affected utility providers.

8-17 RECORD PLANS

Record Drawings shall be prepared in accordance with Section 2-11 *Record Plans* of these improvement standards and shall also include the following:

1. Each sheet of the improvement plan shall be labeled or stamped "As-Built" or "Record Drawing".
2. Elevations of the top of the end of distribution mains and transmission mains.
3. The type of water distribution main and transmission main pipe installed shall be clearly marked on each sheet.
4. The type of fitting and pipe at the end of the distribution mains and transmission mains shall be described.
5. Changes of location of shut-off valves, fittings, air release/vacuum valves, blow-off assemblies, hydrants, and water services for which an improvement plan revision was not obtained.

Record Drawings shall be approved by the City Engineer prior to acceptance of the project.

BLANK PAGE

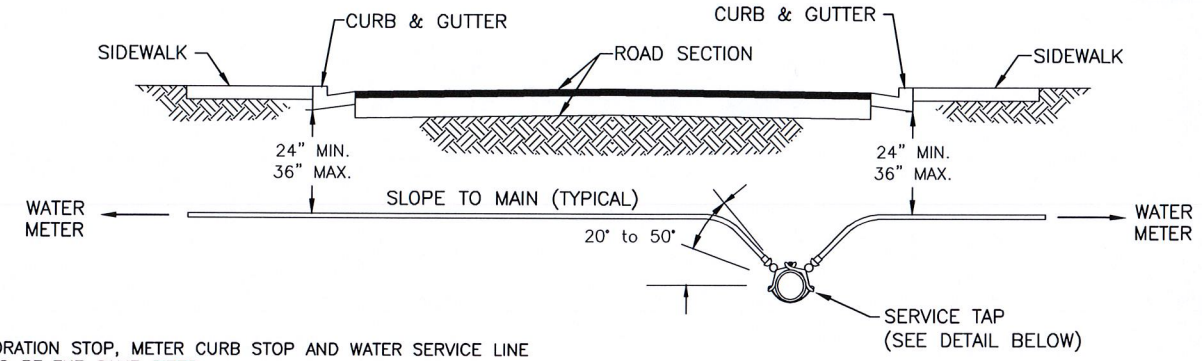

NOTES:

1. CORPORATION STOP, METER CURB STOP AND WATER SERVICE LINE ARE TO BE THE SAME SIZES.
2. SERVICE SADDLES SHALL HAVE A SINGLE WIDE BRONZE STRAP FOR 1" AND 2" SERVICES. DOUBLE STRAPS, FLATTENED TO PROVIDE A WIDE BEARING SURFACE AGAINST THE PIPE, SHALL BE USED FOR SERVICE SADDLE SIZES LARGER THAN 2 INCHES, EXCEPT WHERE SIZE OF TAP EXCEEDS MANUFACTURE'S RECOMMENDED LIMIT FOR SIZE OF WATER MAIN. FOR THIS SITUATION, A SPECIAL FITTING SHALL BE SPECIFIED. BRONZE 'U' BOLTS (NOT FLATTENED) MAY BE PLACED ON CAST IRON AND DUCTILE IRON WATER MAINS.
3. SERVICE SADDLES, CORPORATION STOPS, COUPLING NUTS, BOLTS, AND ALL APPURTENANCES SHALL BE BRONZE.
4. SERVICE TAP MUST BE MADE BETWEEN 20 DEGREES TO 50 DEGREES ABOVE THE SPRINGLINE OF THE PIPE.
5. SERVICE TAPS SHALL BE A MINIMUM OF 18" APART ALONG THE WATER MAIN.
6. INSULATED LOCATING WIRE REQUIRED ON ALL SERVICE LINES, SEE DRAWING 8-4. WIRE SHALL BE CONNECTED TO LOCATING WIRE ALONG WATER MAIN FOR CONTINUITY.
7. SERVICE CONNECTIONS SHALL NOT BE MADE ON WATER MAINS LARGER THAN 12"ø, WITHOUT PRIOR APPROVAL OF ENGINEER (SPECIAL CASES ONLY).
8. WATER SERVICE PIPE MATERIAL SHALL BE "TYPE K" COPPER TUBING PER SECTION 50-40 OF THE CONSTRUCTION SPECIFICATIONS. 1"ø MINIMUM PIPE SIZE OR 1½"ø REQUIRED FOR HOUSES WITH FIRE SPRINKLERS.
9. ALL RESIDENTIAL SERVICES SHALL BE A SINGLE CONTINUOUS PIPE FROM THE MAIN TO THE WATER METER. NO SPLICES OR COUPLINGS WILL BE ALLOWED.
10. A 2"x2" "W" SHALL BE STAMPED INTO FACE OF CURB TO IDENTIFY LOCATION OF WATER SERVICE CROSSING CURB.

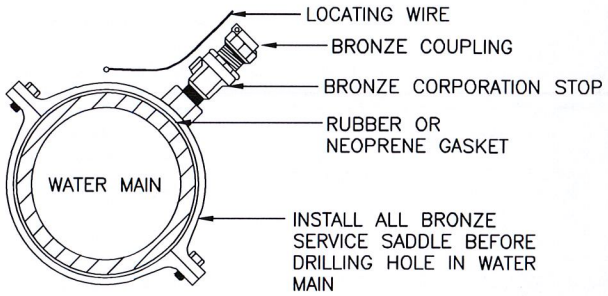

SERVICE TAP
DETAIL

City of Winters *PUBLIC WORKS DEPARTMENT*	DATE: DEC 2015
WATER SERVICE INSTALLATION	SHEET # 1 OF 1
CITY ENGINEER APPROVED *Nicholas J. Ponticello* P.E. NO. 49584	DRAWING #: 8-1

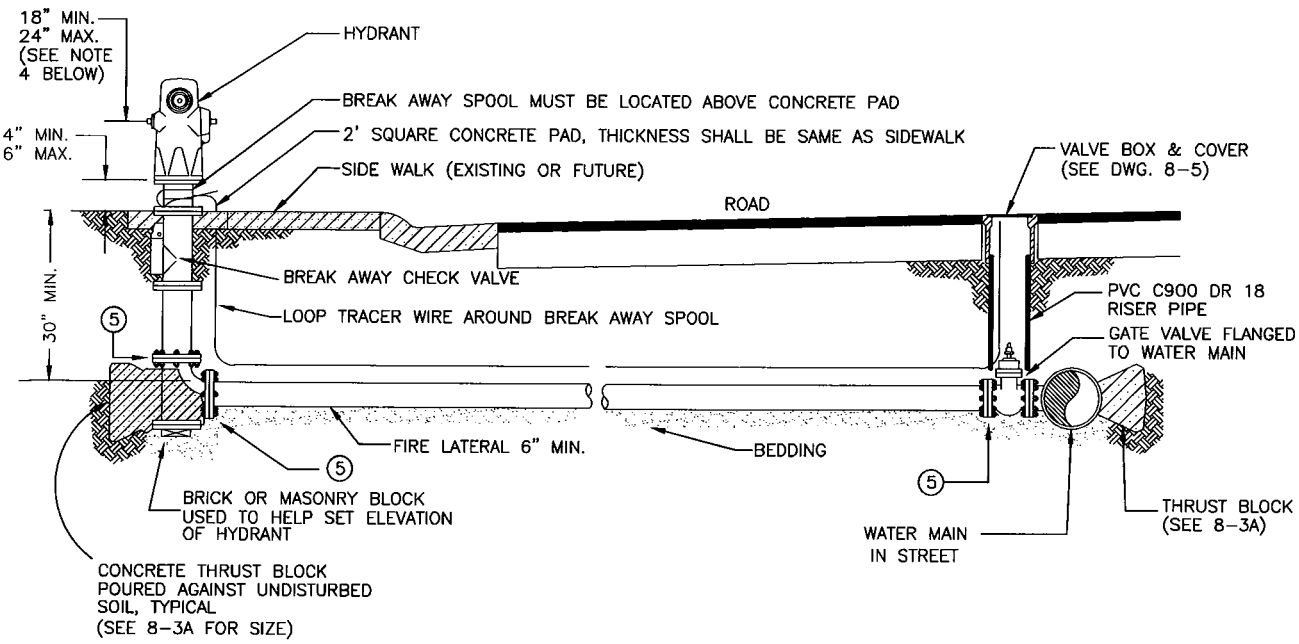

NOTES:

1. IN COMMERCIAL AREAS, FIRE HYDRANTS SHALL BE PROTECTED FROM VEHICULAR DAMAGE BY BOLLARDS AND ACCESSIBLE TO FIRE PROTECTION EQUIPMENT. MIN CLEARANCE FROM HYDRANT TO ABOVE GROUND OBJECTS IS 3'.
2. TYPE OF FIRE HYDRANT SHOWN IS FOR ILLUSTRATIONS ONLY.
3. GATE VALVE SHALL BE FLANGED TO THE WATER MAIN.
4. CENTER OF LOWEST CAP NUT ON HYDRANT SHALL BE 18" MIN. TO 24" MAX. ABOVE TOP OF CONCRETE PAD.
5. THESE JOINTS MAY BE FLANGED, OR RESTRAINED MECHANICAL JOINTS WITH CITY APPROVED RESTRAINING DEVICE.

City of Winters *PUBLIC WORKS DEPARTMENT*	DATE: DEC 2015
FIRE HYDRANT INSTALLATION WATER MAIN IN STREET	SHEET # 1 OF 1
CITY ENGINEER APPROVED Nicholas J. Ponticello P.E. NO. 49584	DRAWING #: 8-2

REQUIRED BEARING AREA IN TOTAL SQUARE FEET

TYPE OF FITTING		90° BEND	45° BEND	11-1/4" BEND 22-1/2" BEND	TEE	DEAD END	TEE WITH PLUG	CROSS WITH PLUGS
TYPICAL INSTALLATION		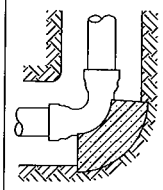	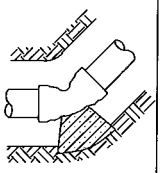	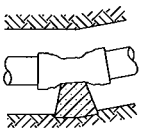	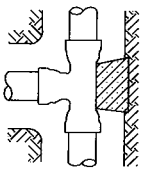	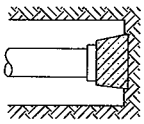		
SIZE OF PIPE	4"	2	1	1	2	2	THRUST BLOCKS NOT ALLOWED USE RESTAINED JOINTS WITH RESTRAINED LENGTH PER SEE SHEET 2 FOR "DEAD ENDS"	
	6"	4	2	1	3	3		
	8"	7	4	2	5	5		
	10"	12	6	3	8	8		
	12"	16	10	5	12	12		

NOTES:

1. THRUST BLOCKS SHALL BE CONSTRUCTED OF CLASS "B" CONCRETE.
2. BEARING AREAS GIVEN ARE FOR TEST PRESSURES OF 150 PSI IN SOIL WITH 2,000 PSF BEARING CAPACITY. IF TEST PRESSURE IS HIGHER OR SOIL BEARING CAPACITY IS LOWER, THRUST BLOCK SIZE SHALL BE SUBJECT TO APPROVAL BY AGENCY.
3. THRUST BLOCKS ARE TO BE POURED AGAINST UNDISTURBED SOIL. IF THIS CANNOT BE DONE, USE RESTAINED JOINTS TO RESIST THRUST OVER RESTAINED LENGTHS WITH AGENCY APPROVAL.
4. PIPE JOINTS ARE TO BE KEPT CLEAR OF CONCRETE.
5. FOR DEAD ENDS, INSTALL 2" TEMPORARY BLOW OFF PER DETAIL 8-12.

City of Winters *PUBLIC WORKS DEPARTMENT*	DATE: DEC 2015
THRUST BLOCK BEARING AREA	SHEET # 1 OF 2
CITY ENGINEER APPROVED Nicholas J. Ponticello P.E. NO. 49584	DRAWING #: 8-3

RESTRAINED LENGTH IN FEET

PIPE CONFIGURATION	CROSSING PIPE SIZE	30" COVER AND GREATER								60" COVER AND GREATER							
		6"		8"		10"		12"		6"		8"		10"		12"	
		DIP	PVC	DIP	PVC	DIP	PVC	DIP	PVC	DIP	PVC	DIP	PVC	DIP	PVC	DIP	PVC
X = PVC PIPE NOT ALLOWED IN RESTRAINED LENGTH, USE ONLY DUCTILE IRON.																	
IN LINE VALVE (RL, RL)		38	X	45	X	58	X	70	X	17	17	26	X	32	X	41	X
VALVE AT TEE (RL, RL; INTERSECTING PIPE) (SEE NOTE 4)	6"	6	6	17	13	37	X	48	X	6	6	12	10	20	19	30	X
	8"	6	6	12	8	27	19	43	X	6	6	6	6	17	15	27	X
	10"	6	6	6	6	19	15	39	X	6	6	6	6	12	11	24	X
	12"	6	6	6	6	14	10	32	X	6	6	6	6	10	8	20	19
TEE W/O THRUST BLOCK (RL) (SEE NOTE 5)		37	X	42	X	56	X	68	X	16	15	23	X	30	X	38	X
VALVE AT CROSS (CROSSING PIPE; RL, RL) (SEE NOTE 5)	6"	6	6	18	15	41	X	50	X	6	6	14	12	22	20	32	X
	8"	6	6	16	12	32	20	44	X	6	6	6	6	18	16	29	X
	10"	6	6	6	6	20	17	40	X	6	6	6	6	14	12	26	X
	12"	6	6	6	6	18	14	34	X	6	6	6	6	12	10	22	20
DEAD END W/O THRUST BLOCK (RL)		64	X	84	X	100	X	118	X	34	X	44	X	53	X	63	X

RL = RESTRAINED LENGTH

NOTES:

1. ALL JOINTS WITHIN THE RESTRAINED LENGTH MUST BE RESTRAINED.
2. RESTRAINING DEVICES FOR MJ'S: FOR DUCTILE IRON USE EBAA MAGALUG 1100, STAR PIPE PRODUCTS STARGRIP 3000, OR SIGMA ON LOK SLD; FOR PVC PIPE USE EBAA 2000PV, OR STAR PIPE PRODUCTS ALL GRIP 3600.
3. RESTRAINING DEVICES FOR PUSH-ON JOINTS: FOR DUCTILE IRON USE U.S. PIPE FIELD LOK GASKET, U.S. PIPE TR FLEX PIPE, OR APPROVED EQUAL; RESTAINED PVC PUSH-ON JOINTS NOT ALLOWED, USE DUCTILE IRON PIPE ONLY FOR RESTRAINED PUSH-ON JOINTS.
4. IF THRUST BLOCK IS NOT INSTALLED BEHIND TEE, RESTAINED LENGTH SHALL BE APPROVED BY AGENCY.
5. THIS CONFIGURATION IS ALLOWED ONLY IF A THRUST BLOCK CANNOT BE INSTALLED BEHIND THE TEE/DEAD END IN ACCORDANCE WITH SHEET 1. IF THRUST BLOCK IS INSTALLED, RESTRAINED LENGTH NOT REQUIRED.
6. JOINTS ON CROSSING PIPES CROSSING PIPES SHALL BE RESTRAINED FOR MINIMUM 18 FEET IN EACH DIRECTION.
7. RESTRAINED LENGTHS ARE BASED ON 150 PSI PRESSURE. IF HIGHER PRESSURE OR HIGHER SURGES ARE ANTICIPATED, THEN THIS TABLE DOES NOT APPLY AND RESTRAINED LENGTHS MUST BE APPROVED BY AGENCY.

City of Winters *PUBLIC WORKS DEPARTMENT*	DATE: DEC 2015
PIPE RESTRAINED LENGTH	SHEET # 2 OF 2
CITY ENGINEER APPROVED *Nicholas J. Ponticello* P.E. NO. 49584	DRAWING #: 8-3

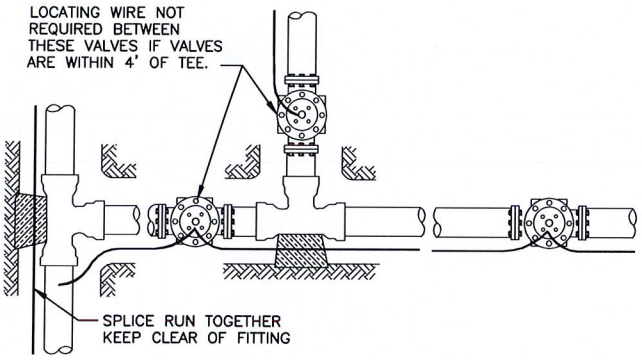

TYPICAL LAYOUT

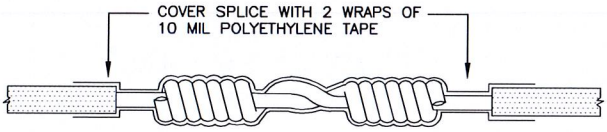

SPLICE DETAIL

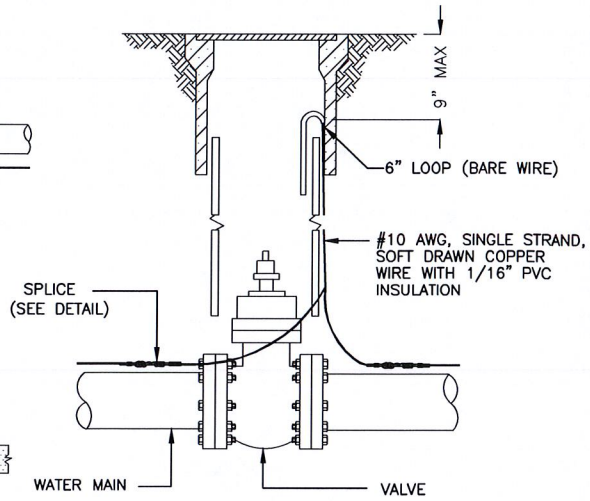

VALVE DETAIL

NOTES:

1. WIRE SHALL BE CONTINUOUS BETWEEN VALVE BOXES, EXCEPT AS NOTED.
2. LOCATING WIRE SHALL BE LAID ON TOP OF THE WATER MAIN, AND SHALL BE TAPED TO IT OR THE POLYETHYLENE ENCASEMENT (IF THE PIPE IS DUCTILE IRON) AT 10' INTERVALS AND TAPED AT ALL FITTINGS. TAPE SHALL BE 10 MIL POLYETHYLENE.
3. CONTRACTOR SHALL CONDUCT A CONTINUITY TEST ON ALL LOCATING WIRE SPLICES.
4. ALL SPLICES SHALL BE SOLDERED.

City of Winters *PUBLIC WORKS DEPARTMENT*	DATE: DEC 2015
LOCATING WIRE FOR WATER MAINS AND SERVICES	SHEET # 1 OF 1
CITY ENGINEER APPROVED Nicholas J. Ponticello P.E. NO. 49584	DRAWING #: 8-4

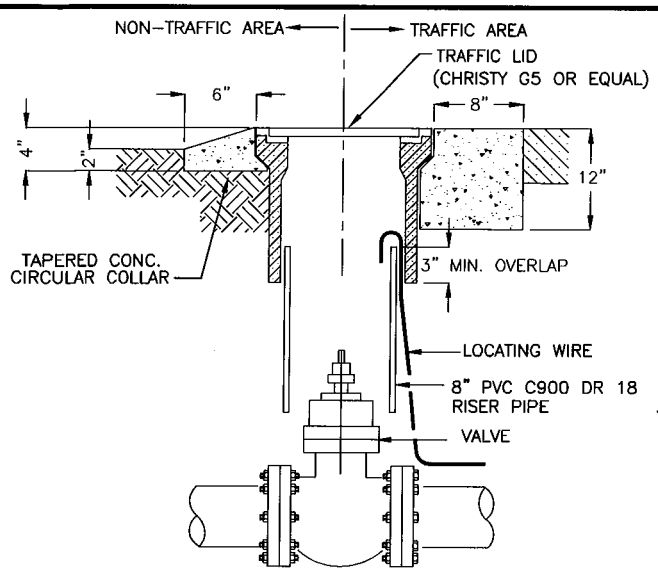

TRAFFIC VALVE BOX

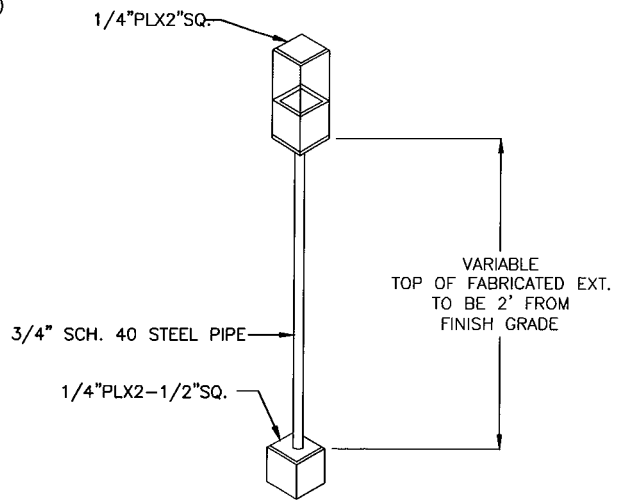

VALVE OPERATING NUT EXTENSION

REQUIRED WHERE VALVE NUT IS IN EXCESS OF 5' FEET BELOW FINISH GRADE. TOP OF OPERATING NUT SHALL BE LESS THAN 3' BELOW FINISH GRADE.

NOTES:

1. VALVE BOX AND RISER SHALL BE SET PLUMB AND CENTERED OVER WATER VALVE NUT.
2. SET VALVE BOX TO FINAL FINISH GRADE. IN AREAS WHERE THE FINISH GRADE HAS NOT BEEN DEFINED, PLACE 4"X4" LOCATING POST PAINTED BLUE WITHIN 1 FOOT OF VALVE BOX. POST SHALL BE 6 FEET IN LENGTH AND BURIED 3 FEET.

City of Winters *PUBLIC WORKS DEPARTMENT*	DATE: DEC 2015
VALVE BOX INSTALLATION AND OPERATING NUT EXTENSION	SHEET # 1 OF 1
CITY ENGINEER APPROVED Nicholas J. Ponticello P.E. NO. 49584	DRAWING #: 8-5

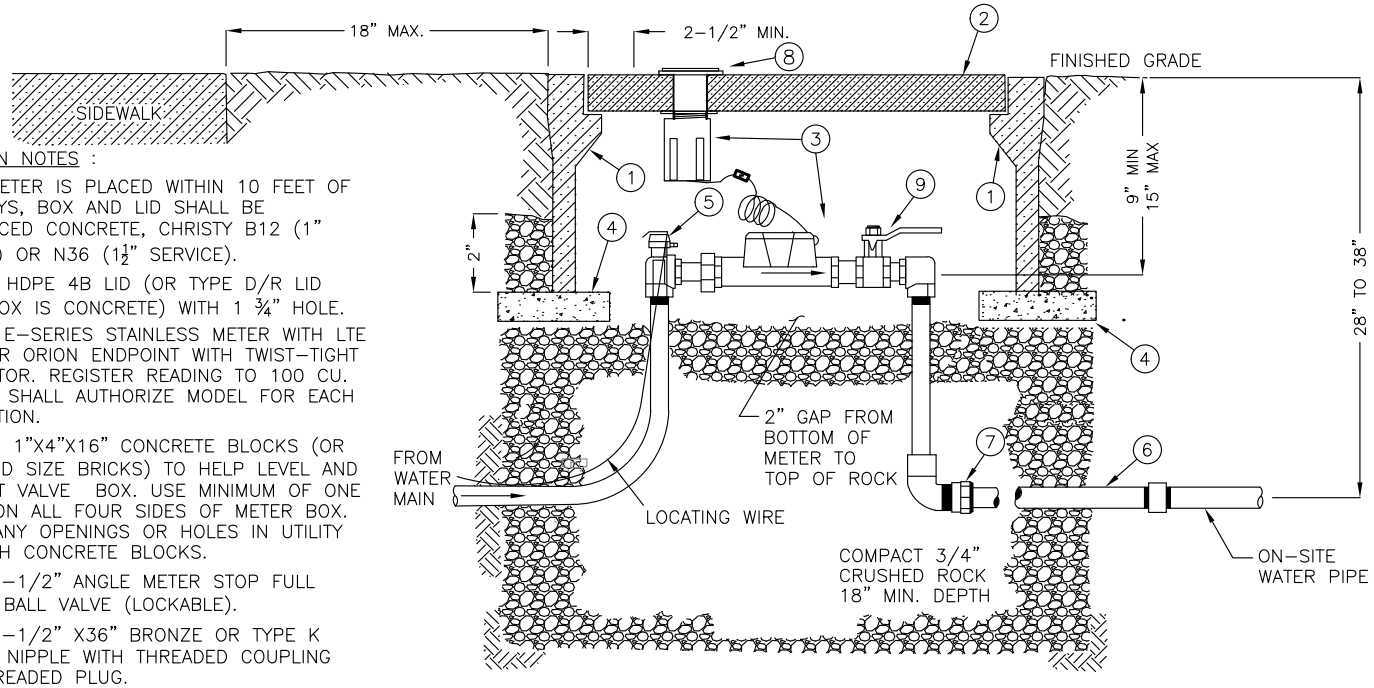

CONSTRUCTION NOTES :

1. WHEN METER IS PLACED WITHIN 10 FEET OF DRIVEWAYS, BOX AND LID SHALL BE REINFORCED CONCRETE, CHRISTY B12 (1" SERVICE) OR N36 ($1\frac{1}{2}$" SERVICE).
2. CARSON HDPE 4B LID (OR TYPE D/R LID WHEN BOX IS CONCRETE) WITH 1 ¾" HOLE.
3. BADGER E-SERIES STAINLESS METER WITH LTE CELLULAR ORION ENDPOINT WITH TWIST-TIGHT CONNECTOR. REGISTER READING TO 100 CU. FT. CITY SHALL AUTHORIZE MODEL FOR EACH APPLICATION.
4. 3/4" TO 1"X4"X16" CONCRETE BLOCKS (OR STANDARD SIZE BRICKS) TO HELP LEVEL AND SUPPORT VALVE BOX. USE MINIMUM OF ONE BLOCK ON ALL FOUR SIDES OF METER BOX. COVER ANY OPENINGS OR HOLES IN UTILITY BOX WITH CONCRETE BLOCKS.
5. 1" OR 1-1/2" ANGLE METER STOP FULL PORTED BALL VALVE (LOCKABLE).
6. 1" OR 1-1/2" X36" BRONZE OR TYPE K COPPER NIPPLE WITH THREADED COUPLING AND THREADED PLUG.
7. BRONZE ADAPTER (AS REQUIRED).
8. LTE CELLULAR ENDPOINT MOUNTED THROUGH THE LID HOLE.
9. CUSTOMER SIDE FULLY PORTED BALL VALVE

SIZING REQUIREMENT:

¾" METERS WITH 1" SERVICES MAY BE USED ONLY ON HOUSES WITHOUT FIRE SPRINKLERS.

1" METERS AND $1\frac{1}{2}$" SERVICES MAY BE USED ON HOUSES WITH FIRE SPRINKLERS WITH APPROVAL. WHERE 1" METER WILL NOT PROVIDE SUFFICIENT FIRE FLOW, $1\frac{1}{2}$" METER OR LARGER SHALL BE USED.

SIZE	BOX*
¾" & 1"	CARSON L1220-12
1½"	CARSON L1730-12

* CARSON OR APPROVED EQUAL, SEE CONSTRUCTION NOTE 1 & 2

NOTES:

1) ALL METALLIC PIPES AND FITTINGS SHALL BE ENCASED WITH 6 MIL PLASTIC SO THAT NO SOIL IS IN CONTACT WITH THE PIPES AND FITTINGS.

2) IDEAL PLACEMENT IS IN PLANTING STRIP, 12" MINIMUM FROM CURB. IF THERE IS NO PLANTING STRIP, PLACE IN YARD, 12" MINIMUM FROM SIDEWALK. AVOID USING STEEL LIDS. AVOID PLACEMENT IN DRIVEWAYS.

City of Winters *PUBLIC WORKS DEPARTMENT*	DATE: NOV 2018
3/4", 1" OR 1½ RESIDENTIAL METERED WATER SERVICE	SHEET # 1 OF 3
CITY ENGINEER APPROVED _____ P.E. NO. 52598	DRAWING #: 8-6

CONSTRUCTION NOTES:

1. REINFORCED CONCRETE UTILITY BOX (CHRISTY N36 FOR 1–1/2" & 2", N30 FOR 1", OR EQUAL).
2. REINFORCED CONCRETE COVER WITH A 1–3/4" PRE–CAST HOLE LOCATED OPPOSITE WATER LABEL (CHRISTY B36G COVER OR EQUAL).
3. BADGER E–SERIES STAINLESS METER WITH REGISTER READING TO 100 CU. FT. WITH ORION LTE CELLULAR ENDPOINT. USE TWIST–TIGHT CONNECTOR. CITY SHALL AUTHORIZE MODEL FOR EACH APPLICATION.
4. FLANGED WINGED ANGLE METER STOP WITH TEFLON COATED BALL.
5. 3/4" TO 1"X4"X16" CONCRETE BLOCK TO HELP SUPPORT VALVE BOX, USE ONE BLOCK ON ALL FOUR SIDES OF METER BOX. COVER ANY OPENINGS OR HOLES IN THE SIDE OF THE UTILITY BOX WITH CONCRETE BLOCK.
6. BRONZE COMPRESSION BY THREADED 90° FITTING.
7. LTE CELLULAR ENDPOINT MOUNTED THROUGH THE COVER.
8. CUSTOMER SIDE ¼ TURN LEVER BALL VALVE

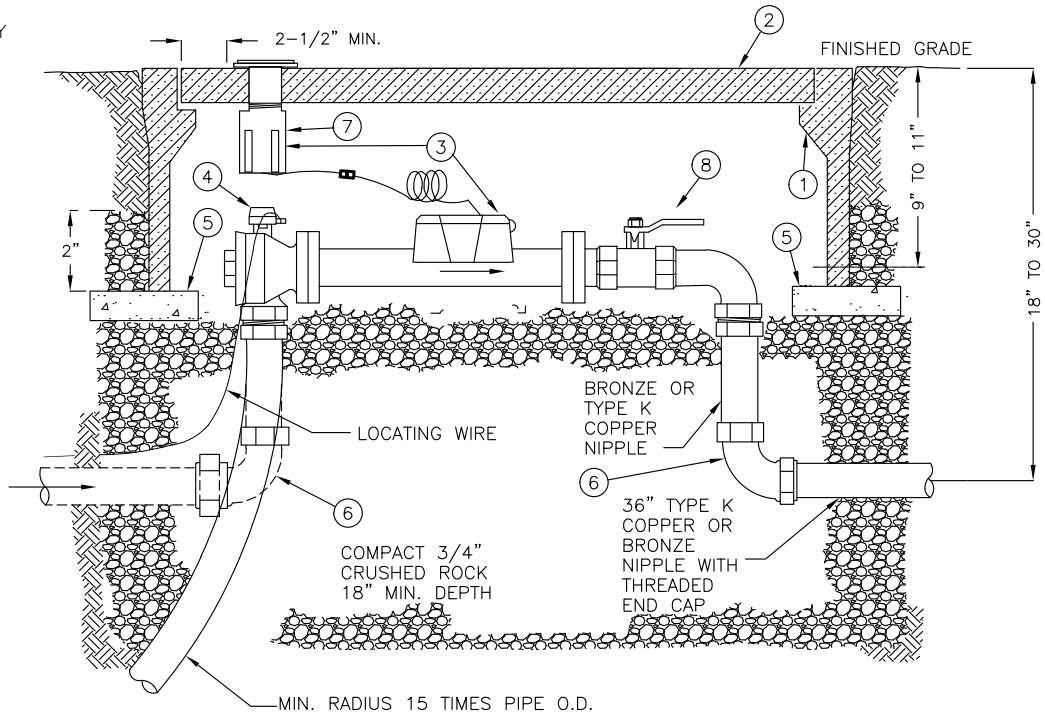

NOTES:

1. ALL METALLIC PIPES AND FITTINGS THAT ARE BURIED SHALL BE ENCASED WITH 6 MIL PLASTIC SO THAT NO SOIL IS IN CONTACT WITH THE PIPES AND FITTINGS.
2. IDEAL PLACEMENT IS IN PLANTING STRIP, 12" MINIMUM FROM CURB OR SIDEWALK. AVOID USING STEEL COVERS. AVOID PLACEMENT IN DRIVEWAYS.

City of Winters PUBLIC WORKS DEPARTMENT	DATE: NOV 2018
1 ½"or 2" COMMERCIAL METER INSTALLATION	SHEET # 2 OF 3
CITY ENGINEER APPROVED	DRAWING # 8–6

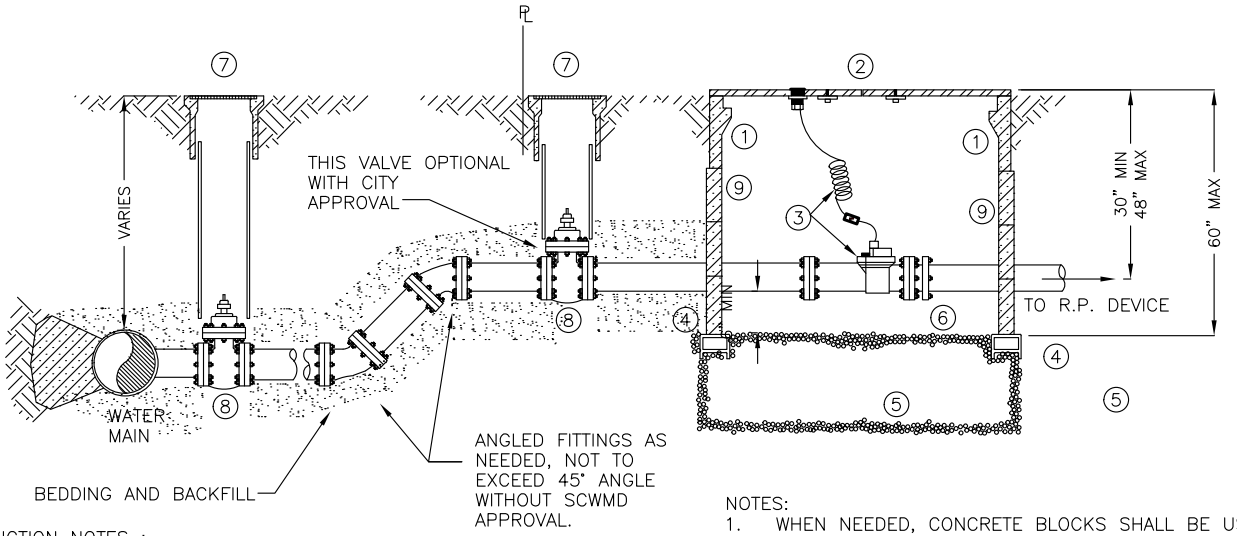

CONSTRUCTION NOTES :

1. REINFORCED CONCRETE UTILITY BOX WITH EXTENSIONS (CHRISTY N48).

2. 2 PIECE STEEL CHECKER PLATE W/ TWO 10" ROUND SELF-CLOSING READING LIDS AND 1-3/4" HOLES FOR THROUGH-THE-LID MOUNTING OF CELLULAR LTE ENDPOINTS. (CHRISTY B48-62G COVER).

3. BADGER RECORDALL COMPOUND SERIES METER WITH REGISTER READING TO 100 CU. FT. WITH ORION LTE CELLULAR ENDPOINT. USE TWIST-TIGHT CONNECTOR. CITY SHALL AUTHORIZE MODEL FOR EACH APPLICATION. TYPE OF METER SHALL BE CALLED OUT ON PLANS.

4. CONCRETE BLOCKS SHALL BE PLACED ALONG THE ENTIRE PERIMETER TO SUPPORT BOX.

5. 3/4" CRUSHED ROCK SUB-BASE, 12" TO 18" DEEP, COMPACT TO 90% COMPACTION.

6. FLANGED COUPLING ADAPTER.

7. VALVE BOX AND LID (SEE 8-5)

8. GATE VALVE, WITH BOTH ENDS FLANGED

9. METER BOX EXTENSION (TYPICAL)

NOTES:

1. WHEN NEEDED, CONCRETE BLOCKS SHALL BE USED TO BLOCK ANY OPENING OR CUT OUT PORTIONS OF THE METER BOX NOT UTILIZED (MINIMUM OF 1" THICK BLOCK ARE REQUIRED).
2. ALL 4" TO 6" DIA. PIPE BETWEEN THE WATER MAIN AND THE METER SHALL BE DUCTILE IRON WITH POLYETHYLENE ENCASEMENT AND 6 INCHES OF SAND BACKFILL AND 6 INCHES OF SAND BEDDING. JOINTS BETWEEN MAIN AND METER SHALL BE RESTRAINED.
3. 3" PIPE SHALL BE TYPE K COPPER OR BRONZE WRAPPED WITH 6 MIL PLASTIC AND HAVE SAND BEDDING AND BACKFILL. VALVES ON 3 INCH DIAMETER PIPE SHALL HAVE BRONZE CORPORATION AND CURB VALVES WITH TEFLON COATED BALLS.
4. VALVES ATTACHED TO THE MAIN MUST HAVE FLANGED ENDS.
5. INSTALL LOCATING WIRE PER DETAIL 8-4.

City of Winters PUBLIC WORKS DEPARTMENT	DATE: NOV 2018
3" to 6" METER INSTALLATION	SHEET # 3 OF 3
CITY ENGINEER APPROVED	DRAWING # 8-6

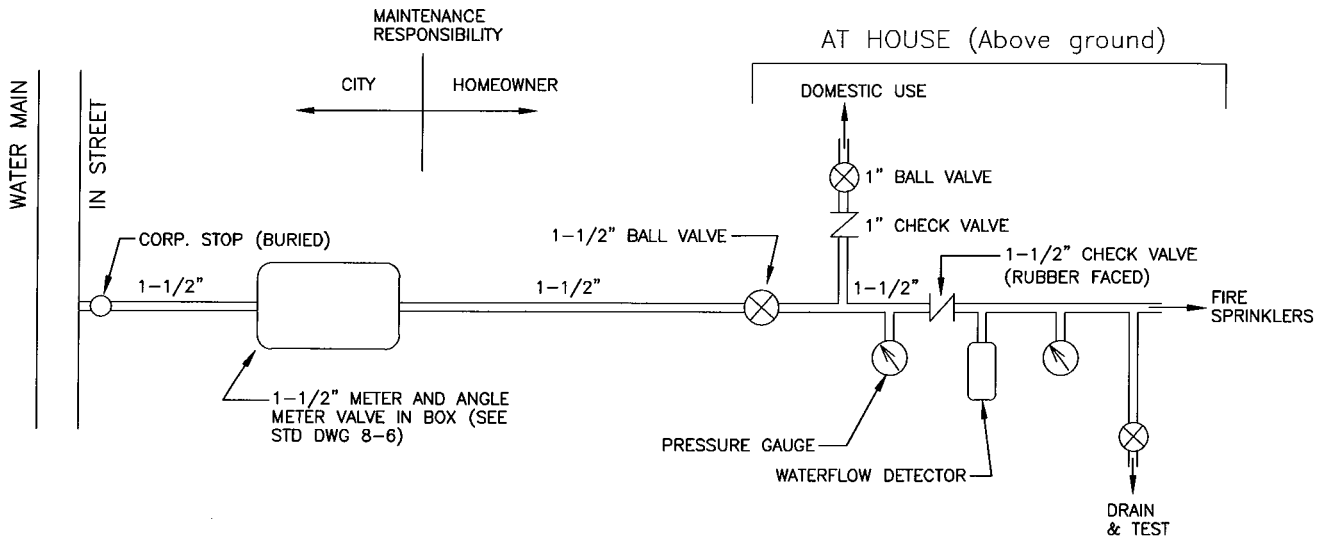

NOTES:

1. THE RESIDENTIAL SERVICE DETAILS ARE APPLICABLE ON SINGLE-FAMILY RESIDENTIAL SERVICES ONLY. ALL OTHERS SHALL USE THE COMMERCIAL STANDARD WHEN REQUIRED.
2. FIRE SERVICE IMPROVEMENTS SHALL BE INSTALLED BY THE HOUSE CONTRACTOR CONCURRENTLY WITH HOUSE CONSTRUCTION.
3. ALL IMPROVEMENTS SUBJECT TO CITY AND FIRE DIST. INSPECTION AND APPROVAL.
4. ALL CONNECTIONS SHALL BE THREADED OR GLUE JOINT ONLY.

City of Winters *PUBLIC WORKS DEPARTMENT*	DATE: DEC 2015
FIRE SPRINKLER SERVICE RESIDENTIAL	SHEET # 1 OF 2
CITY ENGINEER APPROVED Nicholas J. Ponticello P.E. NO. 49584	DRAWING #: 8-7

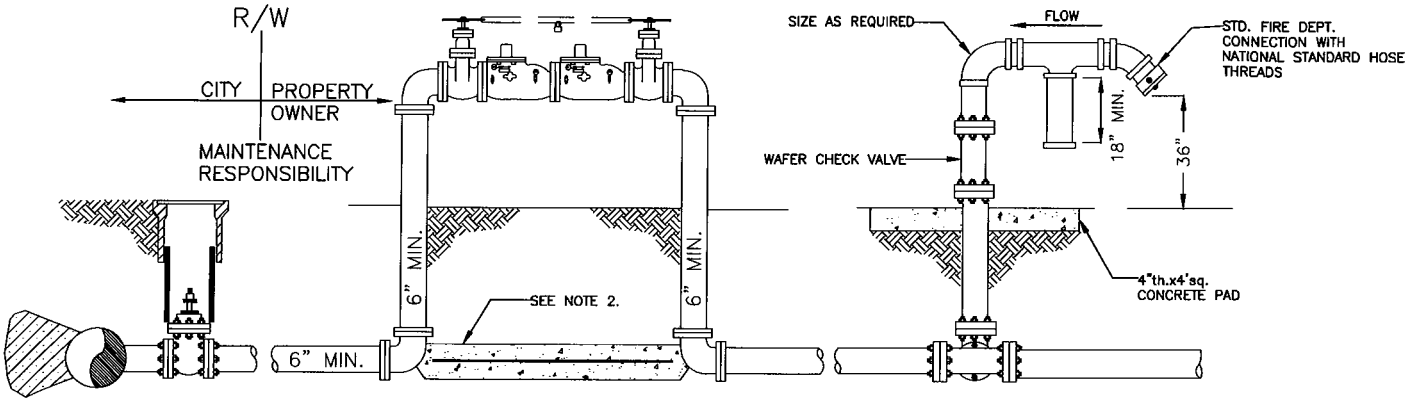

NOTES:

1. ALL JOINTS TO BE FULLY RESTRAINED. ALL PIPE & FITTINGS SHALL BE DUCTILE IRON.
2. CONCRETE THRUST BLOCK WITH ONE PIECE OF #4 REBAR.
3. DOUBLE DETECTOR CHECK VALVE ASSEMBLY (AMES OR APPROVED EQUAL), REDUCED PRESSURE TYPE, WITH OS&Y RESILIENT WEDGE GATE VALVES, REFER TO CURRENT LIST OF APPROVED BACKFLOW PREVENTION ASSEMBLIES PUBLISHED BY THE STATE OF CALIFORNIA DEPARTMENT OF HEALTH SERVICES. OS&Y VALVES TO BE LOCKED WITH FIRE DEPARTMENT APPROVED PADLOCK AND FITTED WITH TAMPER SWITCHES AS REQUIRED ON FIRE SYSTEM APPLICATION.
4. CHECK VALVE AND PIPE SHALL BE U.L.–F.M. APPROVED.
5. INSTALLATION MAY VARY WITH FIELD CONDITIONS AND FIRE DEPARTMENT REQUIREMENTS.

City of Winters *PUBLIC WORKS DEPARTMENT*	DATE: DEC 2015
FIRE SPRINKLER SERVICE COMMERCIAL	SHEET # 2 OF 2
CITY ENGINEER APPROVED Nicholas J. Ponticello P.E. NO. 49584	DRAWING #: 8–7

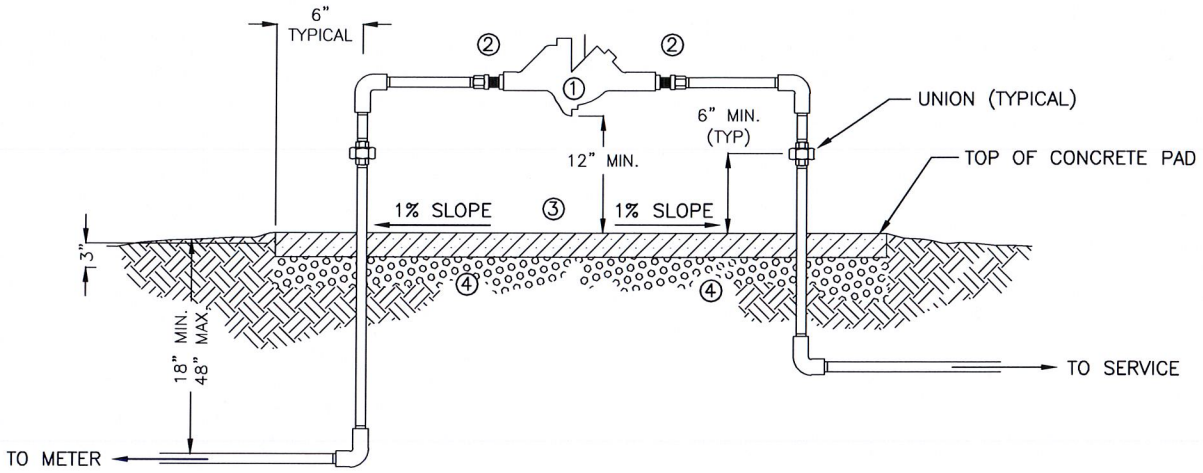

CONSTRUCTION NOTES O:

1. REDUCED PRESSURE BACKFLOW PREVENTER.
2. BRONZE BODY, RESILIENT SEATED BALL VALVE MINIMUM WORKING PRESSURE OF 175 PSI.
3. 3" SLAB – 18" WIDE WITH VARYING LENGTH.
4. 1/2" OR 3/4" CRUSHED ROCK, 4" MINIMUM THICKNESS, MECHANICALLY COMPACTED.

NOTES:

1. REDUCED PRESSURE BACKFLOW PREVENTER SHALL BE LISTED ON THE STATE OF CALIFORNIA'S DEPT. OF HEALTH SERVICES MOST RECENT LIST OF APPROVED REDUCED PRESSURE BACKFLOW PREVENTERS.
2. ALL PIPES SHALL BE GALVANIZED SCHEDULE 40 STEEL, TYPE K COPPER, OR BRONZE. ALL BURIED PIPES SHALL BE WRAPPED WITH 6 MIL. POLYETHYLENE ENCASEMENT OR 10 MIL POLYETHYLENE OR PVC TAPE.
3. GALVANIZED PIPE SHALL HAVE ANODE BAG PER COUNTY BUILDING INSPECTION REQUIREMENTS CODE.
4. ASSEMBLY SHALL BE SECURED WITH A VANDAL PROTECTIVE REMOVABLE ENCLOSURE SUCH AS A LOW GAUGE WIRE MESH CAGE. ENCLOSURE SHALL INCLUDE A LOCKING MECHANISM TO THE CONCRETE PAD.

City of Winters *PUBLIC WORKS DEPARTMENT*	DATE: DEC 2015
REDUCED PRESSURE BACKFLOW PREVENTER, 1" TO 3"	SHEET # 1 OF 2
CITY ENGINEER APPROVED *Nicholas J. Ponticello* P.E. NO. 49584	DRAWING #: 8–8

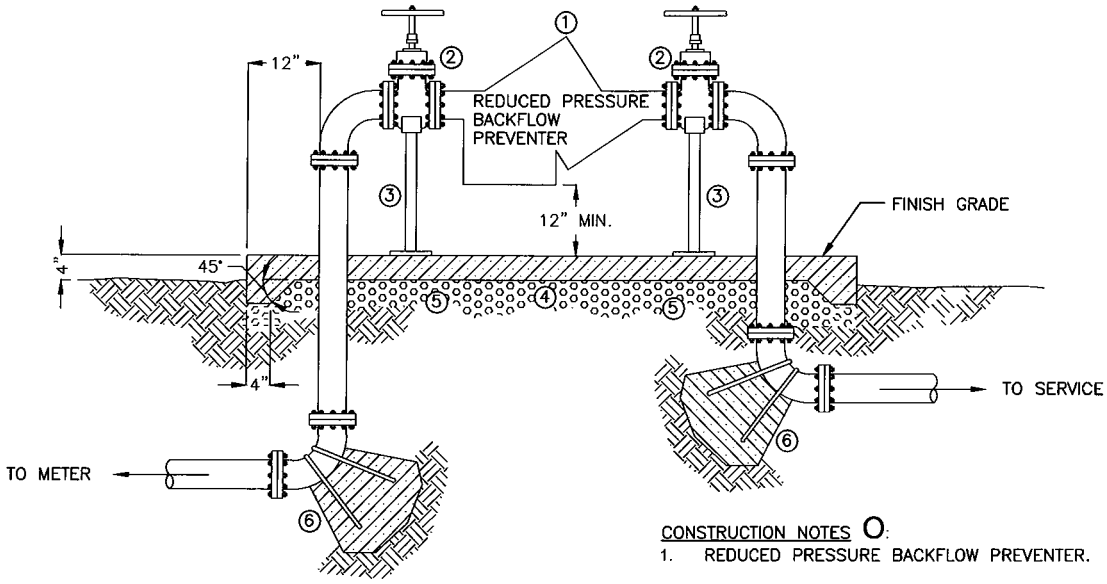

NOTES:
1. REDUCED PRESSURE BACKFLOW PREVENTER SHALL BE LISTED ON THE STATE OF CALIFORNIA'S DEPT. OF HEALTH SERVICES MOST RECENT LIST OF APPROVED REDUCED PRESSURE BACKFLOW PREVENTERS.
2. INSTALL LOCATING WIRE PER 8-4.
3. ALL PIPE SHALL BE CEMENT LINED DUCTILE IRON, CLASS 350 MEETING THE REQUIREMENTS OF AWWA C151 AND C115 ALL JOINTS SHALL BE FLANGED. FLANGES SHALL CONFORM TO AWWA C207, CLASS D REQUIREMENTS.
4. BURIED PIPE SHALL BE WRAPPED WITH 8 MILS OF POLYETHYLENE ENCASEMENT WITH SAND BEDDING AND BACKFILL.

CONSTRUCTION NOTES O:
1. REDUCED PRESSURE BACKFLOW PREVENTER.
2. FLANGED VALVE.
3. PIPE SUPPORT, 2" GALVANIZED SCH 40 AT MINIMUM.
4. 4" CONCRETE SLAB – 24" WIDE WITH VARYING LENGTH.
5. 6" OF CRUSHED AGGREGATE MECHANICALLY COMPACTED.
6. THRUST BLOCK WITH #5 REBARS. WRAP THE PORTION OF THE REBAR THAT IS NOT EMBEDDED IN THE CONCRETE WITH 20 MIL POLYETHYLENE OR PVC TAPE. SEE DWG 8-3 FOR SIZING.

City of Winters *PUBLIC WORKS DEPARTMENT*	DATE: DEC 2015
REDUCED PRESSURE BACKFLOW PREVENTER, 4" OR LARGER	SHEET # 2 OF 2
CITY ENGINEER APPROVED Nicholas J. Ponticello P.E. NO. 49584	DRAWING #: 8-8

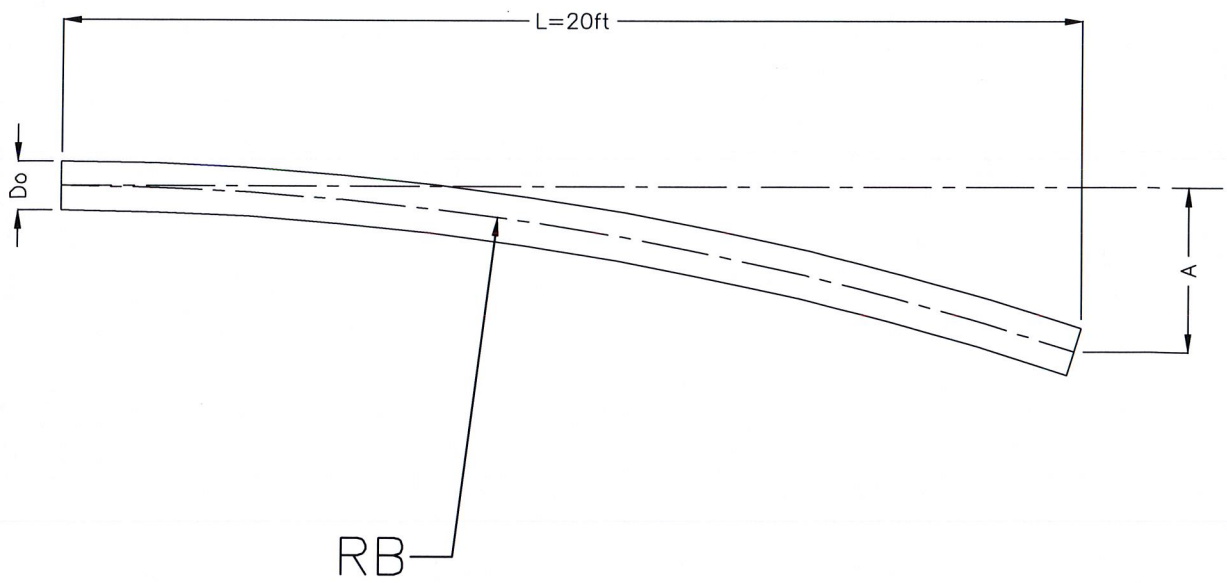

DO=AVERAGE OUTSIDE PIPE DIAMETER (INCHES)
A=OFFSET AT THE END OF THE PIPE (INCHES)
RB=MINIMUM BENDING RADIUS (FEET)

MAX. DEFLECTION FOR PVC PIPE,AWWA C900 CLASS 200 DR 14

NORMAL PIPE DIAMETER	AVERAGE OUTSIDE PIPE DIAMETER,DO	MINIMUM WALL THICKNESS	MINIMUM BENDING RADIUS,RB	OFFSET AT FREE END "A"
(INCHES)	(INCHES)	(INCHES)	(FEET)	(INCHES)
4	4.800	0.343	120	20
6	6.900	0.493	185	13
8	9.050	0.646	240	10
10	11.100	0.793	400	6
12	13.200	0.943	800	3

JOINT DEFLECTION OF AWWA C900 PVC PIPE IS PROHIBITED.

City of Winters *PUBLIC WORKS DEPARTMENT*	DATE: DEC 2015
MAXIMUM DEFLECTION FOR PVC PIPE	SHEET # 1 OF 1
CITY ENGINEER APPROVED *Nicholas J. Ponticello* P.E. NO. 49584	DRAWING #: 8-9

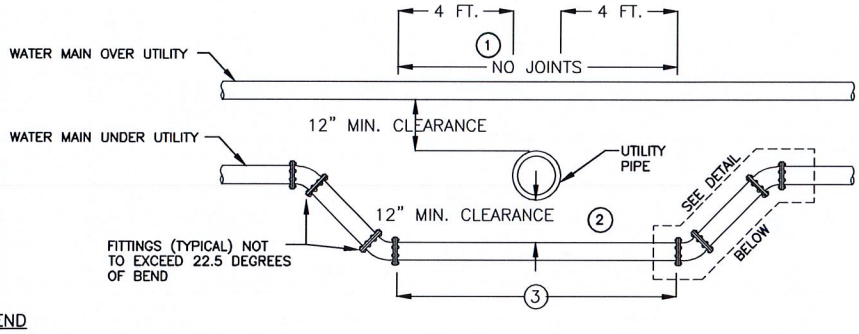

CONSTRUCTION NOTES O:

1. IF UTILITY BEING CROSSED IS NOT A STORM DRAIN, SEWER, OR OTHER WATER LINE, THEN THE "NO JOINT" REQUIREMENT DOES NOT APPLY.
2. IF THE UTILITY BEING CROSSED IS A SEWER, STORM DRAIN OR OTHER WATER LINE, THE TYPE OF PIPE MUST BE DUCTILE IRON OR AWWA C900 DR 14 PVC PIPE.
3. NO JOINTS ALLOWED IF LESS THAN 18 FEET. ALL JOINTS BETWEEN FITTINGS MUST BE RESTRAINED WITH EITHER OF THE METHODS DESCRIBED FOR DIP. BELL RESTRAINTS FOR PVC PIPE ARE NOT ALLOWED.

LEGEND

DIP=DUCTILE IRON PIPE
AWWA=AMERICAN WATER WORKS ASSOC.
PVC=POLYVINYL CHLORIDE PIPE
POJ=PUSH ON JOINTS

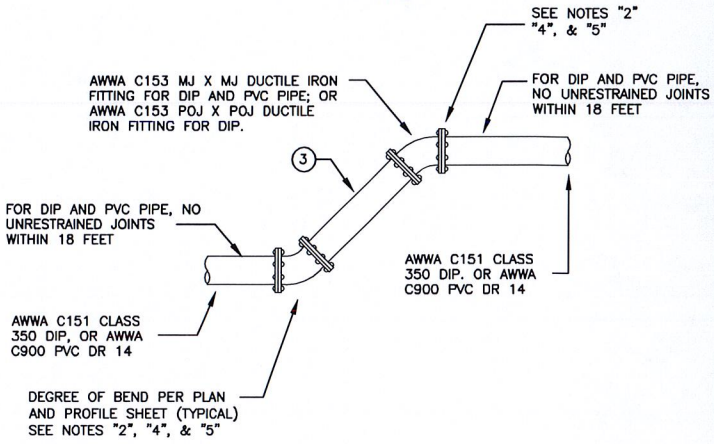

NOTES:

1. IF DIP IS USED, FITTINGS MAY HAVE BELL ENDS WITH U.S. PIPE FIELD LOK GASKETS FOR RESTRAINING DEVICES OR APPROVED EQUAL. BELL RESTRAINTS FOR PVC PIPE ARE NOT ALLOWED.
2. IF BEND IS TO EXCEED 22.5 DEGREES, THE BEND AND THE RESTRAINED LENGTH MUST BE APPROVED BY THE CITY.
3. WRAP ALL DIP AND FITTINGS WITH 8 MIL. POLYETHYLENE ENCASEMENT IN ACCORDANCE WITH AWWA C105.
4. RESTRAINING DEVICE FOR DIP: FOR POJS, USE U.S. PIPE FIELD LOK GASKETS OR APPROVED EQUAL, FOR MJ JOINTS USE STAR PIPE PRODUCTS STARGRIP 3000, STAR PIPE PRODUCTS ALLGRIP 3600, EBAA MEGALUG 2000PV SERIES, OR APPROVED EQUAL.
5. RESTRAINING DEVICE FOR PVC PIPE: USE MJ FITTINGS WITH STAR PIPE PRODUCTS ALLGRIP 3600, EBAA MEGALUG 2000PV SERIES, OR APPROVED EQUAL.
6. SEE PLAN & PROFILE FOR RESTRAINED LENGTH AND DEGREE OF BEND.
7. THIS DETAIL IS FOR WATER PIPES 12" IN DIAMETER & SMALLER.

City of Winters *PUBLIC WORKS DEPARTMENT*	DATE: DEC 2015
UTILITY CROSSING	SHEET # 1 OF 1
CITY ENGINEER APPROVED *Nicholas J. Ponticello* P.E. NO. 49584	DRAWING #: 8-10

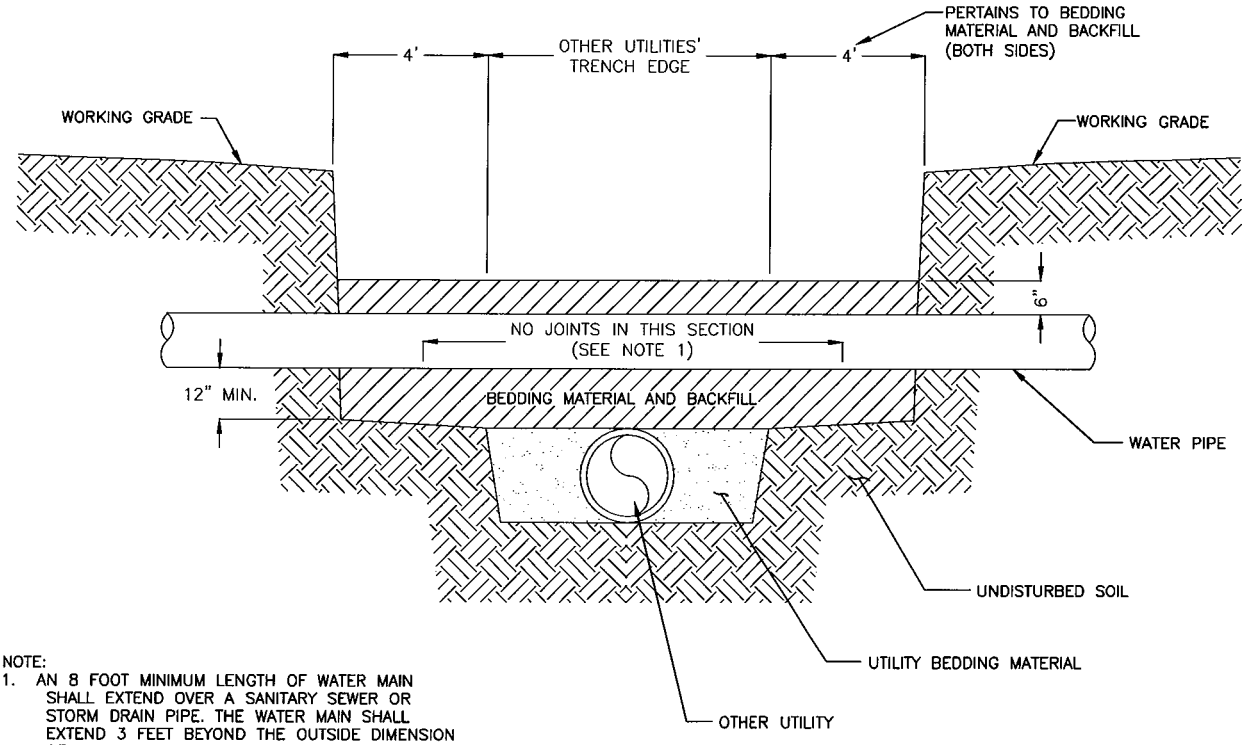

NOTE:

1. AN 8 FOOT MINIMUM LENGTH OF WATER MAIN SHALL EXTEND OVER A SANITARY SEWER OR STORM DRAIN PIPE. THE WATER MAIN SHALL EXTEND 3 FEET BEYOND THE OUTSIDE DIMENSION OF ALL OTHER UTILITIES.

2. <u>BEDDING AND BACKFILL MATERIAL</u>
   USE 1/2" CRUSHED AGGREGATE FOR PVC WATER PIPE USE SAND FOR DUCTILE IRON WATER PIPE COMPACT BEDDING AND BACKFILL MATERIAL TO 90% RELATIVE COMPACTION.

City of Winters *PUBLIC WORKS DEPARTMENT*	DATE: DEC 2015
UTILITY CROSSING UNDER EXISTING WATER MAIN	SHEET # 1 OF 1
CITY ENGINEER APPROVED Nicholas J. Ponticello P.E. NO. 49584	DRAWING #: 8-11

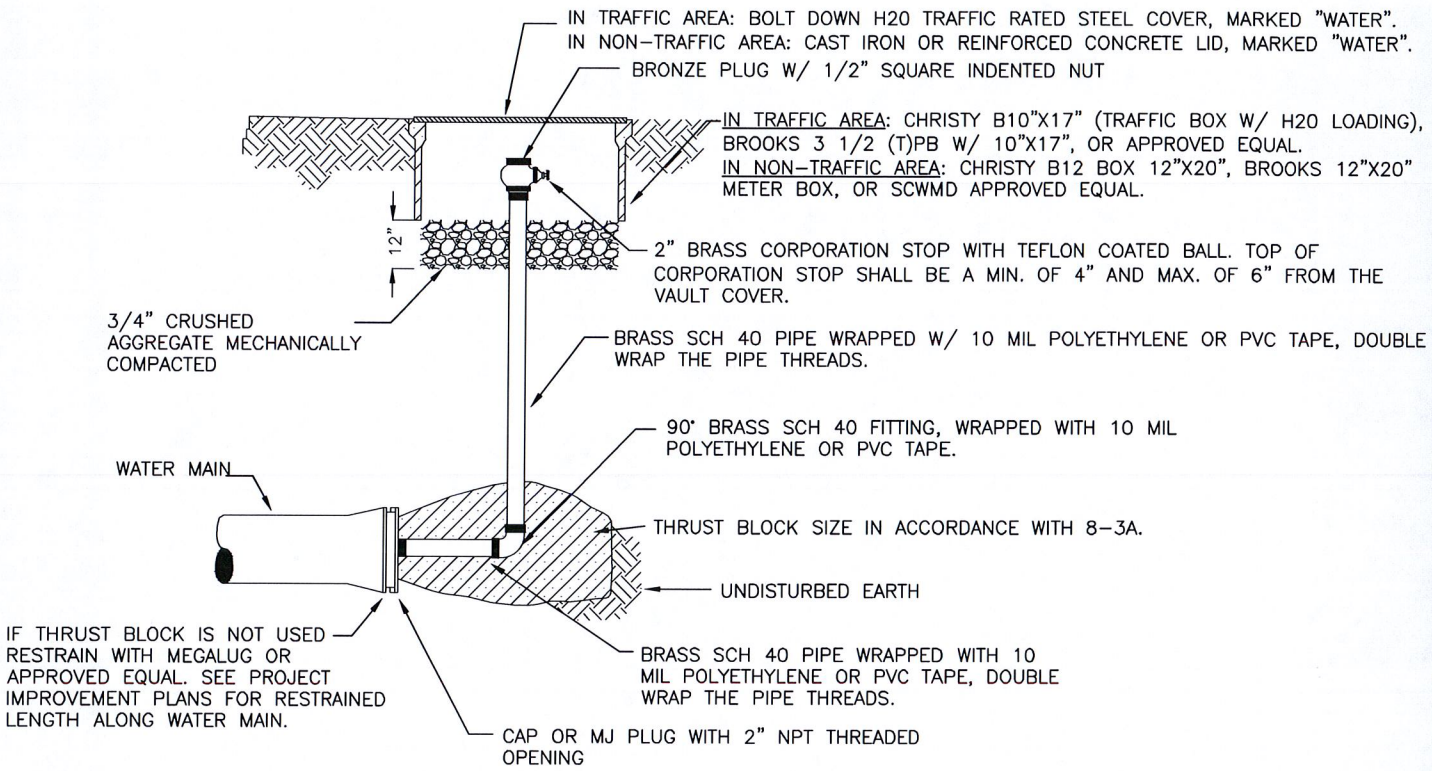

NOTE:

BACKFILL WITH NATIVE MATERIAL AND COMPACT TO 90% COMPACTION. IN TRAFFIC AREAS THE BACKFILL AND COMPACTION REQUIREMENTS FOR THE ROAD SHALL GOVERN.

City of Winters *PUBLIC WORKS DEPARTMENT*	DATE: DEC 2015
BLOW-OFF ASSEMBLY 2" TEMPORARY	SHEET # 1 OF 1
CITY ENGINEER APPROVED Nicholas J. Ponticello P.E. NO. 49584	DRAWING #: 8-12

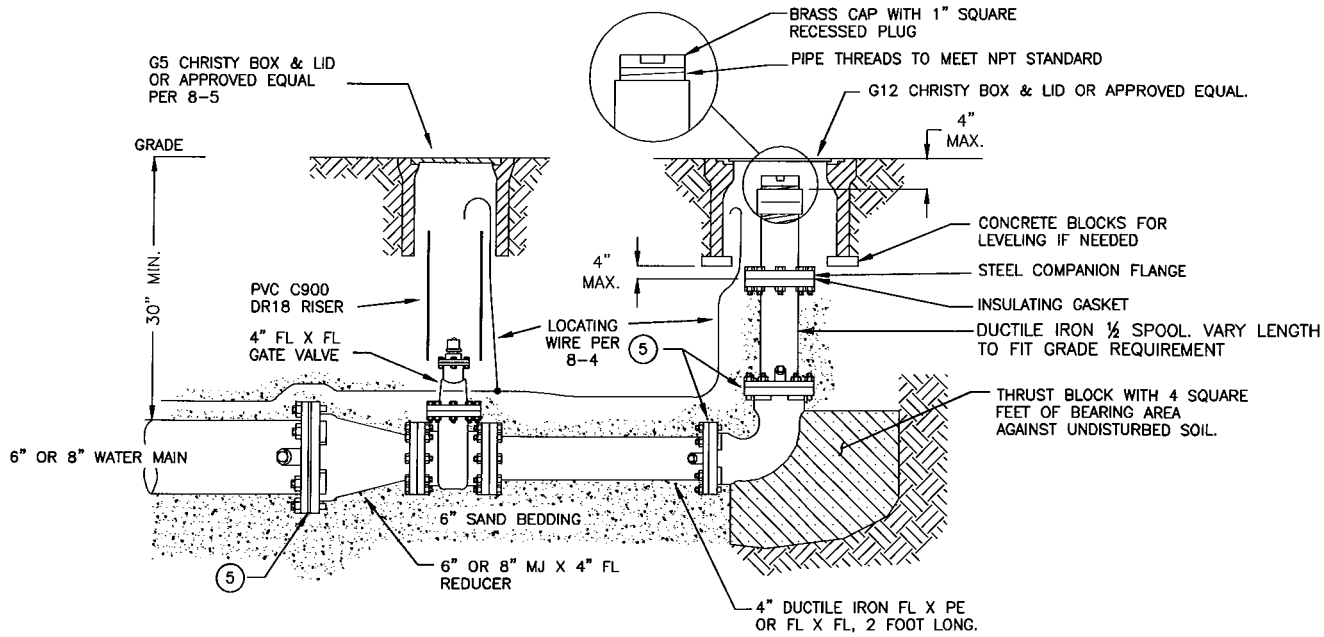

NOTES:

1. WRAP 4" GATE VALVE AND ALL METAL FITTINGS AND PIPE WITH 8 MIL POLYETHYLENE ENCASEMENT PER AWWA C105.
2. ALL FITTINGS SHALL HAVE A MINIMUM PRESSURE CLASS OF 200 PSI AND MEET AWWA C110 OR AWWA C153 STANDARDS.
3. PROVIDE 6 INCHES OF SAND BEDDING AND BACKFILL WITH SAND TO 6 INCHES ABOVE THE TOP OF PIPE AND FITTINGS. COMPACT TO 90% RELATIVE COMPACTION.
4. GALVANIZED STEEL PIPE NOT ALLOWED.
5. THESE JOINTS MUST BE RESTRAINED. TYPES OF RESTRAINED JOINTS MAY BE: (1) FLANGE, (2) MJ WITH APPROVED RESTRAINING DEVICES (EBAA OR STAR PIPE PRODUCTS). OR (3) FOR D.I.P., PUSH ON JOINTS WITH U.S. PIPE FIELD-LOK GASKET OR APPROVED EQUAL.

City of Winters *PUBLIC WORKS DEPARTMENT*	DATE: DEC 2015
4" BLOW-OFF ASSEMBLY AT END OF MAIN	SHEET # 1 OF 1
CITY ENGINEER APPROVED Nicholas J. Ponticello P.E. NO. 49584	DRAWING #: 8-13

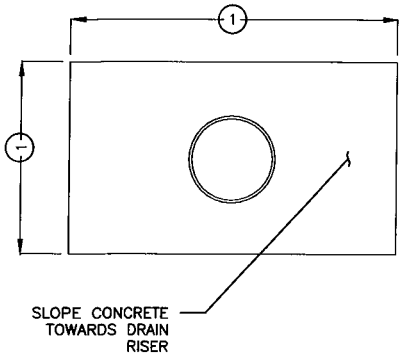

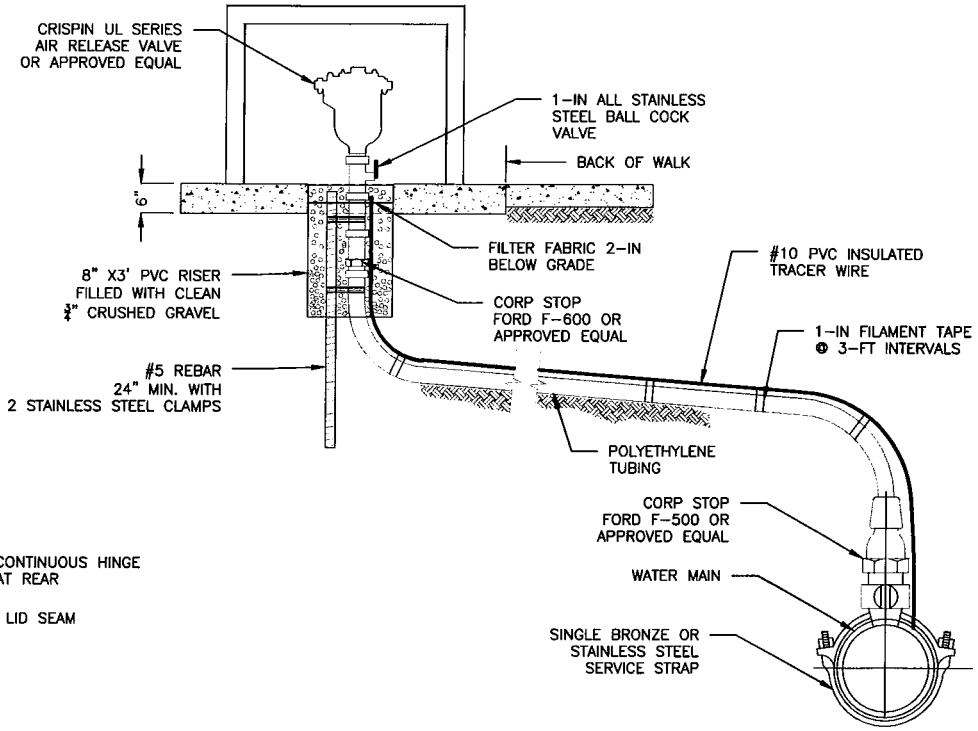

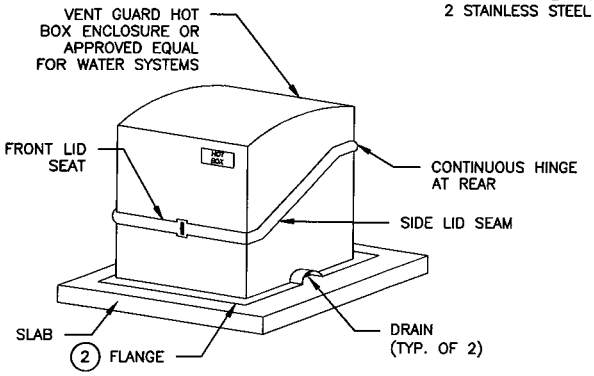

CONSTRUCTION NOTES:

1. SLAB WIDTH AND LENGTH SHALL BE PER MANUFACTURERS RECOMMENDATION.
2. ENCLOSURE SHALL BE ANCHORED THROUGH THE EXTERIOR FLANGE WITH STEEL ANCHORS.

City of Winters *PUBLIC WORKS DEPARTMENT*	DATE: DEC 2015
AIR/VACUUM VALVE COMBINATION	SHEET # 1 OF 1
CITY ENGINEER APPROVED Nicholas J. Ponticello P.E. NO. 49584	DRAWING #: 8-14

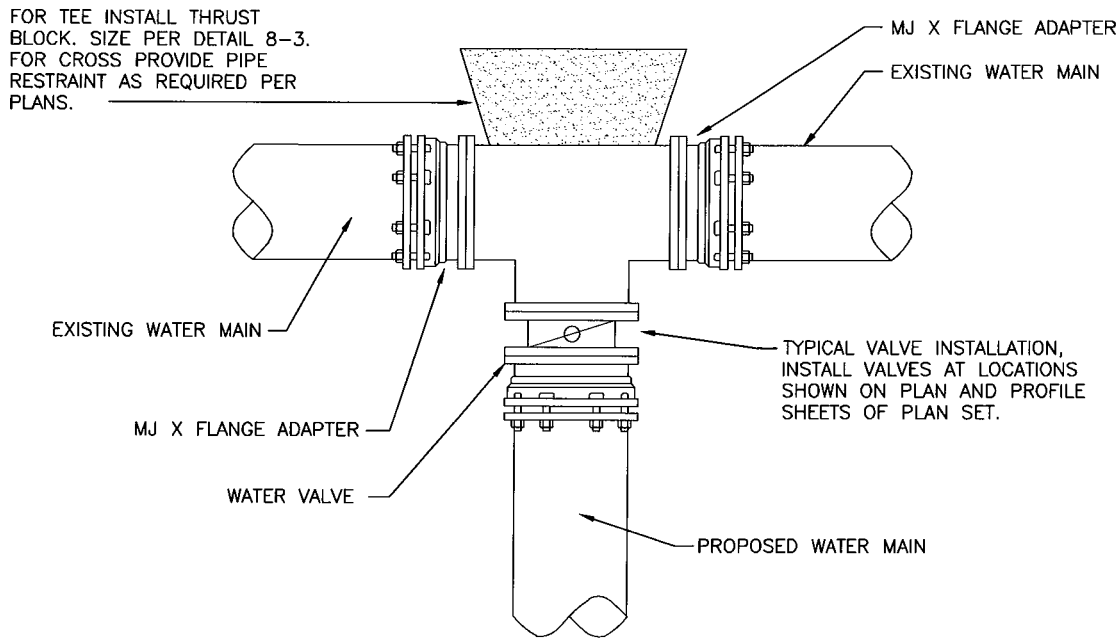

NOTES:

1. TEE AND MJ X FLANGE ADAPTER SHALL BE WRAPPED WITH 8 MIL POLYETHYLENE ENCASEMENT.
2. DIG SUMP UNDER CUT IN LOCATION AND PUMP ALL WATER FROM EXISTING MAIN AWAY FROM CUT IN LOCATION. DO NOT ALLOW ANY WATER TO ENTER EXISTING PIPE. ADHERE CHLORINE TABLETS TO TEE OR CROSS, THE NUMBER OF TABLETS SHALL BE IN ACCORDANCE WITH THE CONSTRUCTION SPECIFICATION. SPRAY EXISTING PIPE, ALL FITTINGS AND VALVES WITH A SOLUTION OF SUPER CHLORINATED WATER JUST PRIOR TO INSTALLATION.
3. PROVIDE RESTRAINT OF PIPE JOINT AS REQUIRED BY PLANS AND DETAIL 8-3.

City of Winters *PUBLIC WORKS DEPARTMENT*	DATE: DEC 2015
CUT IN	SHEET # 1 OF 1
CITY ENGINEER APPROVED Nicholas J. Ponticello P.E. NO. 49584	DRAWING #: 8-15

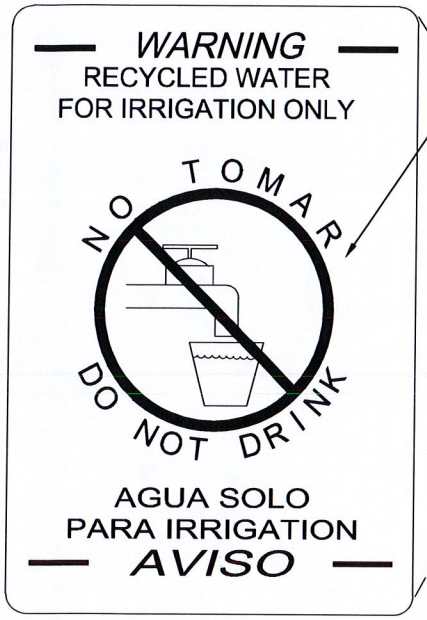

SIGN, LETTER HEIGHTS, & SYMBOL SIZE SHOWN ARE IN REQUIRED PROPORTIONS

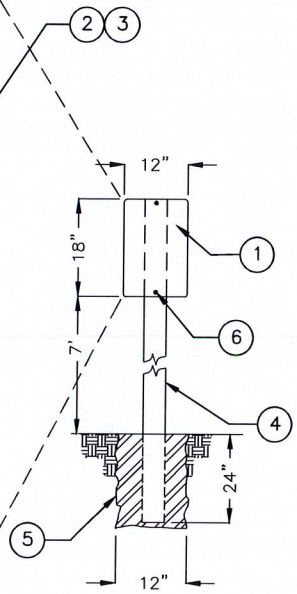

CONSTRUCTION NOTES:

1. 12" X 18" ALUMINUM STEEL ALLOY 6061–T6 0.080" GAUGE, ROUNDED CORNERS (1" RADIUS).
2. LETTER HEIGHT & SYMBOL SIZE SHALL BE PROPORTIONAL TO SIGN SIZE.
3. LETTER & SYMBOL SHALL BE WHITE IN COLOR. THE BACKGROUND SHALL BE PURPLE (PANTONE 241) IN COLOR.
4. 4"X4" POST. SHALL BE REDWOOD OR TREATED DOUGLAS FIR (STATE OF CALIF. SPEC. NO. 56–2.02B)
5. FOOTING SHALL BE 24" IN DEPTH WITH COMPACTED EARTH IN 4" LIFTS OR CONCRETE.
6. 5/16"ø X 4–1/2" ZINC PLATED STEEL BOLT WITH VANDAL PROOF NUTS.

ALL SIGNS SHALL CONFORM TO THE STANDARD SPECIFICATIONS. A DIRECT OR PRESSURE SENSITIVE DECAL INK SCREENING PROCESS REQUIRED.

3" X 4–1/2" PRESSURE SENSITIVE DECALS ARE REQUIRED FOR IRRIGATION CONTROLLERS AND OTHER ABOVE GROUND FACILITIES REQUIRING A WARNING SIGN. WHEN CONDITIONS AND/OR FACILITY CHARACTERISTICS RENDER THESE SPECIFICATIONS INAPPROPRIATE, ALTERNATIVE SIGNING MUST BE SUBMITTED FOR REVIEW AND APPROVAL BY THE PUBLIC WORKS DIRECTOR.

City of Winters *PUBLIC WORKS DEPARTMENT*	DATE: DEC 2015
NON–POTABLE RECYCLED WATER WARNING SIGN	SHEET # 1 OF 1
CITY ENGINEER APPROVED Nicholas J. Ponticello P.E. NO. 49584	DRAWING #: 8–16

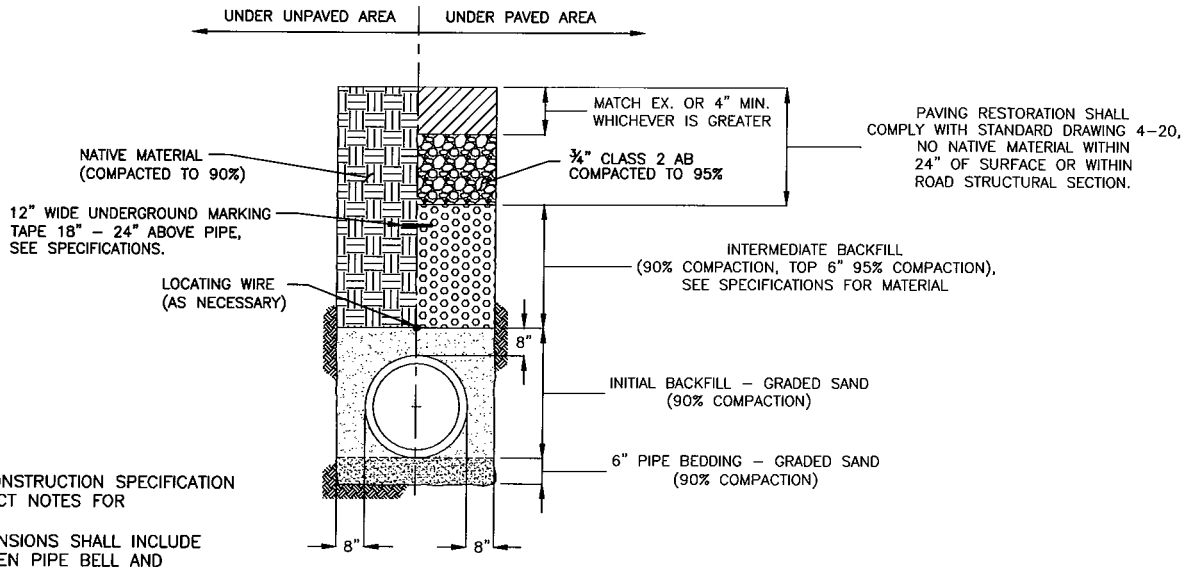

NOTES:

1. SEE SECTION CONSTRUCTION SPECIFICATION AND THE PROJECT NOTES FOR REQUIREMENTS.
2. 6" AND 8" DIMENSIONS SHALL INCLUDE DISTANCE BETWEEN PIPE BELL AND TRENCH WALL.
3. PLACE INITIAL SAN BACKFILL TO TOP OF PIPE, SPRAY WITH WATER TO COMPACT, THEN PLACE INITIAL SAN BACKFILL TO AT LEAST 8" ABOVE TOPE OF PIPE. SPARY WITH WATER TO COMPACT. AFTER SPRAYING WITH WATER, USE MECHANICAL COMPACTION METHODS IF NEEDED.
4. COORDINATE COMPACTION TESTS WITH RESIDENT ENGINEER.
5. JETTING WILL NOT BE ALLOWED FOR COMPACTION OF BACKFILL OR PIPE BEDDING MATERIAL.
6. IN UNPAVED AREAS, PIPE BEDDING MATERIAL AND INITIAL BACKFILL MATERIALS SHALL BE COMPACTED THE SAME AS IN PAVED AREAS.

City of Winters *PUBLIC WORKS DEPARTMENT*	DATE: DEC 2015
TRENCH DETAIL	SHEET # 1 OF 1
CITY ENGINEER APPROVED *Nicholas J. Ponticello* P.E. NO. 49584	DRAWING #: 8-17

SECTION 9

STORM DRAINAGE DESIGN

9-1 AGENCY POLICY AND REQUIREMENTS

A. The planning, design and construction of drainage facilities and other related appurtenances to be owned, operated, and maintained by the City of Winters shall comply with these standards.

B. All storm drainage systems shall also comply with any adopted Storm Drainage System Master Plans including the "Putah Creek/Dry Creek Subbasin Drainage Report" and the "Moody Slough Subbasin Drainage Report."

C. A registered Civil Engineer prior to submission for plan review shall sign all submitted plans. All work shall be in accordance with these design standards and standard engineering practice.

D. The Director shall decide all questions of interpretation of "good engineering practice," guided by the standards and manuals of the discipline in question.

E. All drainage facilities shall be located within the City's rights-of-way unless otherwise approved by the Director. Adequate access for maintenance of the system shall be provided.

F. All new habitable structures shall be protected from the 100-year (1%) flood event and all public roads are protected from the appropriate design flood event.

G. Finished floor elevations shall be set at least one foot (1') above the 100-year floodwater surface.

H. The design of a new storm drain system shall include consideration of the downstream creek or storm drain. The Consulting Engineer shall show that the existing storm water system can convey the proposed drainage without adverse upstream, downstream or adjacent impacts or that the upstream, downstream or adjacent facilities are being improved to carry post project flows.

9-2 DEFINITIONS

The following terms, abbreviations or definitions shall apply and the intent and meaning shall be interpreted as stated herein wherever they are encountered in these standards or in any documents or instruments referenced by these standards unless otherwise approved by the Director.

Abbreviation	Description
ASTM	American Society for Testing and Materials.
FEMA	Federal Emergency Management Agency.
Trunk Drainage	Mainline drainage from an area over 30 acres.
Credit Letters or Reimbursement Agreement	An agreement between the city and developer identifying eligible reimbursement costs.
Right-of-Way	A strip of land dedicated, condemned or reserved for public use.
Drainage Easement	A strip of land dedicated, condemned or reserved for drainage use.

Abbreviation	Description
Temporary	Not permanent
Overland Release Path	An alignment that allows the passage of floodwater through a development without damaging structures.

9-3 FEDERAL FLOOD PROGRAM

A. The City of Winters is a participant in the National Flood Insurance Program and all development in the City shall comply with the regulations of the Federal Emergency Management Agency (FEMA). Amendments of FEMA flood maps will be required for all commercial and subdivision development located in a federal flood zone. Petitions for a Conditional Letter of Map Amendment (CLOMA) or Conditional Letter of Map Revision (CLOMR), including any fee required by FEMA, shall be submitted to the City before improvement plans are approved. These regulations do not preclude the City from requiring additional standards to protect the public from projected runoff.

B. Fill for the removal of land from a designated FEMA 100-year floodplain, or a watercourse where building pads will be created, must be compacted to 95 percent (95%) of the maximum density obtainable with the modified proctor test method (ASTM Standard D-1557) or an equivalent test method acceptable to FEMA.

9-4 LOW IMPACT DEVELOPMENT AND BEST MANAGEMENT PRACTICES

The City of Winters encourages the incorporation of Low Impact Development (LID) technologies to mimic the natural hydrology of the lands prior to disturbance. The objective of LID and post-construction BMPs for storm water is to capture, infiltrate, treat, and minimize storm water runoff in excess of pre-construction runoff before it reaches drainage systems, including but not limited to, gutters, piping and drainage channels. Each property should incorporate LID techniques and technologies to facilitate this objective.

The current Construction General Permit was adopted in 2009, with state specified post-construction requirements for projects that are not covered by a MS4 Permit (population less than 10,000). Those requirements shall be met with all projects.

9-5 DRAINAGE DIVERSIONS

A. The diversion of natural drainage is allowable only within the limits of the proposed improvement. All drainage must enter and leave the improved area at its original horizontal and vertical alignment unless an agreement, approved by the Director, has been executed with the adjoining property owners or drainage is being discharged into a City right-of-way or other existing drainage feature.

B. Temporary drainage diversions during construction may be approved by the Director and shall be located and constructed in such a fashion as to permit their removal when necessary for the prevention of damage to adjoining properties.

9-6 DRAINAGE EASEMENTS

A. In unusual circumstances, where the Director or designee has given prior approval, City storm drain facilities may be placed in easements. Such easements must be wide enough to accommodate normal construction equipment and shall be easily accessible to such equipment as

necessary to construct, operate and maintain the facility. The easement shall be offered to the City of Winters.

B. Where improvements fall on adjacent property (such as daylighting ditch profiles) written permission from the adjacent property owner(s) for such construction shall be required. A copy of the documents, which grant such approval, shall be submitted to the Director or designee before the approval of the improvement plans.

C. In the event necessary permanent offsite easements cannot be acquired through negotiation, the City will condemn necessary rights-of-way providing the person, firm, or corporation requesting such condemnation enters into a written agreement to pay all costs and expenses of the condemnation. The agreement shall require a cash deposit that will consist of the estimated cost of condemnation plus 50%, including, but not limited to, land or easement purchase cost, temporary construction easements, staff, appraiser and attorneys fees. It shall require payment of all costs and expenses of the deposit as specified by the City. Any unspent funds will be returned.

D. Acquisition and maintenance of temporary construction easements outside of the limits of the subdivision shall be the subdividers responsibility.

E. Easements for closed conduits shall meet the following width criteria:

1. All easements for closed conduits shall have a minimum width equal to the greater of fifteen feet (15') or the required trench width according to the standard detail for pipe bedding and initial backfill (DWG. 9-1) plus two feet (2') of additional width for every foot of depth as measured from the bottom of the pipe to finished grade. Exceptions to the minimum width require approval by the Director.

2. All conduits shall be centered within their easements.

3. Drainage easements for open channels shall have sufficient width to contain the ultimate channel, fencing where required and a twenty-foot (20') service road with drainage ditch. Additional width shall be provided to allow equipment to safely negotiate the service road for the purposes of construction, operations and maintenance activities.

4. Easements shall not be split along property lines unless otherwise approved by the Director.

9-7 DRAINAGE CAPACITY/DESIGN

A. All drainage systems shall be designed to accommodate the ultimate development of the entire upstream watershed. The design storm shall be used in the design of closed conduit drainage systems. All open channel drainage systems shall be designed to carry the 100-year frequency design storm with freeboard. The City shall determine freeboard requirements.

B. The Consulting Engineer shall design an overland release path which prevents flooding to existing and proposed structures in the event of malfunction or overloading of the drainage system. The overland release path shall also be designed to carry the 100-year-design storm flows that exceed the capacity of the drainage system. The overland release path shall be shown on the grading plan for the project. All pad grades shall be a minimum of 1' above the 100-year water surface or 1' above the overland release path whichever is higher. The overland release path shall be designed and constructed in a manner to transport the peak rate of runoff from the 100-year frequency storm falling on fully developed and saturated tributary watershed. Streets, parking lots, playgrounds, pedestrian areas, pedestrian walkways, utility easements and other open space areas may be considered compatible uses with the overland release.

9-8 DESIGN COMPUTATION

The design computations for drainage shall include the following information that shall be submitted before the plans will be accepted for checking:

A. Topographic map showing existing and proposed ground elevations that show on-site and off-site watershed boundaries draining onto the site. It shall also include total and sub-shed areas in acres.

B. Quantity of flow (cfs) to each structure with corresponding area and land uses that generate the quantity.

C. Quantity of flow (cfs) in each pipe.

D. Flow line elevation of manhole or structure.

E. Top of structure elevation.

F. Hydraulic grade line elevation at each structure.

G. Hydraulic gradient

H. Pipe size, type, class, length and gradient.

I. Channel dimensions, flow and water surface profile computations.

J. Electronic computer input files used for analysis and design in acceptable electronic media format.

9-9 DESIGN RUNOFF

Design runoff shall be calculated in accordance with the current Yolo County's Hydrology and Drainage Design Manual, in accordance with the general standard of engineering practice and as follows:

Drainage Area Size	Peak Flow Method	Design Storm
Up to 640 Acres	Yolo County Modified Rational Method	10 year for pipe systems draining less than 160 acres and 100 year for overland routing of excess storm flows. All major channels, pump stations and detention facilities shall be modeled using the "Greater than 640 acres" requirements.
Greater than 640 Acres	HEC-HMS or equivalent	100 year for pipe systems draining more than 640 acres, channels, bridges, culverts, and detention facilities.

9-10 HYDRAULICS

A flap gate shall be installed in all laterals the flow into a mainline storm drain whenever the water surface level of the main line is higher than the surrounding area drained by the lateral. The flap gate must be set back from the main line drain so that it will open freely and not interfere with the main line flow. A junction structure shall be constructed for this purpose.

A. Hydraulic Grade Line

1. Hydraulic grade line calculations shall begin at the ultimate future 100-year channel water surface elevation for new pipe systems flowing into a channel. For the design storm, the hydraulic grade line shall be a minimum one-half foot (1/2') below the elevation of all inlet

grates and manhole covers. The hydraulic grade line shall be shown on the plans wherever the hydraulic grade line is above the soffit of the pipe.

2. A note shall be made on the plans indicating stationing where the hydraulic grade line is below the soffit of the pipe.

3. For open channel systems, the hydraulic grade line shall be shown for the design storm and 100-year flood events.

4. In adjacent unimproved areas with no available development plans, the future gutter flow line is assumed to be one and one-half feet (1.5') lower than the natural ground elevation.

B. **Hydraulic Gradient (Energy Grade Line)**

In order to analyze the drainage system to determine if design flows can be accommodated without causing flooding at some locations or causing flows to exit the system at locations where this is unacceptable, the consulting engineer shall analyze the hydraulic gradient. Following are the equations and charts needed for manual calculation of the location of the hydraulic gradient. The Director reserves the right to determine the appropriate method for determination of the Hydraulic Gradient (Energy Grade Line).

The Mannings Formula shall be used to compute capacities of all open and closed conduits other than driveway and cross-culverts.

C. **Friction Losses**

Friction losses can be calculated two ways. These methods cannot be interchanged for design of the pipe system. One method shall be used throughout the analysis. The first method uses a conservative Manning's "n" value to account for minor losses.

1. **Method 1 - Friction Losses**

The Manning's formula shall be used to compute capacities of all open and closed conduits and all cross culverts that will become a part of the closed conduit system.

The minimum 'n' values to be used in the Manning's formula shall conform to the following:

Pipe Material	'n' value
Precast Concrete Pipe	0.015
High Density Polyethylene Pipe	0.015
Polyvinylchloride Pipe	0.015
Concrete Box Culvert (within closed conduit system)	0.016
Ribbed Metal Pipe	0.015
Concrete Cast-In-Place Pipe	0.015
Pavement Surfaces	0.016
Open Channel Fully Lined	0.018
Corrugated Metal Pipe 2-2/3" x ½" Corrugations	0.024
Corrugated Metal Pipe 3" x 1" or 5" x 1" Corrugations	0.028
Open Channel with Lined Bottom, Clean Sides	0.035
Earth Channel with Clean and Uniform Sides	0.060

Pipe Material	'n' value
Earth Channel with Natural Bottom and Sides	0.080 or as specified

Using Method 1 does not require the analysis of other minor losses except for Trashrack Head Loss identified in 9-10.C.3.h. Pipes that are designed with inlet control shall account for losses associated with inlet control.

2. **Method 2 - Minor losses**

Energy losses from pipe friction shall be determined by the following:

$S_f=[Qn/1.486AR^{2/3}]^2$

Where:

Sf= friction slope, ft/ft

Q= flow rate, ft /s

n= Mannings coefficient

A= area, ft^2

R= hydraulic radius

The head loss due to friction is determined by the formula:

$H_f=S_fL$

Where:

H_f = friction head loss, ft

L = length of outflow pipe, ft

The minimum '"n" value used in Mannings formula shall conform to the following:

Pipe Material	'n' value
Precast Concrete Pipe	0.012
High Density Polyethylene Pipe	0.012
Polyvinylchloride Pipe	0.012
Concrete Box Culvert (within a closed conduit system)	0.013
Ribbed Metal Pipe	0.013
Concrete Cast-In-Place Pipe	0.014
Pavement Surfaces	0.016
Open Channel Fully Lined	0.018
Corrugated Metal Pipe 2-2/3" x 1/2" Corrugations	0.024
Corrugated Metal Pipe 3" x 1" or 5" x 1" Corrugations	0.028
Open Channel with Lined Bottom, Clean Sides	0.035
Earth Channel (Clean, Uniform Sides) or Natural Channel	0.060
Earth Channel with Natural Bottom and Sites	0.080 or as specified

3. Velocity Head Losses

Analysis methods must account for all minor losses. Overly compensating for minor losses by increasing the friction loss for the pipe material shall not be allowed.

Minor head loss is usually written as:

$H_L=K_c(V^2/2g)$

Where:

H_L is, the minor head loss

K_c is a loss coefficient dependent on the type of loss

$V^2/2g$ is the velocity head

The loss coefficient and the form of the equation are different depending on the type of loss, whether flow is open channel or pressure flow, and at times, whether flow is subcritical or supercritical. Full discussion and values of coefficients are given in several references (Chow *Open Channel Hydraulics;* Brater and King *Handbook of Hydraulics;* Rouse *Fluid Mechanics for Hydraulic Engineers;* Hendrickson *Hydraulics of Culverts).* The following are minor head loss formulas for hydraulic structures commonly found in storm drain systems and open channels.

a. Entrance Losses

Entrance losses to box culverts and pipes of various materials can be estimated by using the entrance loss coefficients listed in Table 9-2 in conjunction with the minor head loss equation.

b. Manhole and Junction Losses

Junctions are locations where two or more pipes join together to form another pipe or channel.

Multiple pipes or channels coming together at a junction should flow together smoothly to avoid high head losses. Items that promote turbulent flow and-high losses include a large angle between the two (>60°), a large vertical difference between the two (greater than 6 inches (6") between the two inverts), and absence of a semicircular channel or benching at the bottom of the junction box in the case of pipes. Special problems arise when smaller pipes join a larger one at a junction.

c. Straight Through Manhole

In a straight through manhole where there is no change in pipe size, the minor loss shall be calculated by:

Hm = 0.05 (V2/2g)

d. Incoming Opposing Flows

The head loss at a junction, Hp, for two almost equal and opposing flows meeting head-on with the outlet direction perpendicular to both incoming directions is considered as the total velocity head of outgoing flow.

Hj1=V2/2g

e. Changes in Direction of Flow

When main storm drainpipes or lateral lines meet in a junction, velocity is reduced within the chamber and specific head increases to develop the velocity needed in the outlet pipe. The sharper the bend (approaching 90°) the more severe the energy loss

becomes. When the outlet conduit is sized, determine the velocity and compute head loss in the chamber by the minor head loss formula in conjunction with the following:

K	Degree of Turn (In Junction)
0.19	15
0.35	30
0.47	45
0.56	60
0.64	75
0.70	90 and greater

Any degrees of turn greater than 90 degrees requires the approval prior to submission of plans.

For a graphic solution to other degree of turns, refer to drawing 9-2.

Table 9-2: Entrance Loss Coefficients for Culverts (FHWA 1985) Outlet Control, Full or Partly Full Entrance Head Loss.

$H_e = k_e (V^2/2g)$

Type of Structure and Design of Entrance	Coefficient k_e
Pipe, Concrete	
Projecting from fill, socket end (groove-end)	0.2
Projecting from fill, sq. cut end	0.5
Headwall or headwall and wingwalls	
Socket end of pipe (groove-end)	0.2
Square Edge	0.5
Rounded (radius = 1/12D)	0.2
Mitered to conform to fill slope	0.7
*End-section conforming to fill slope	0.5
Beveled edges, 33° or 45° bevels	0.2
Side- or slope-tapered inlet	0.2
Pipe, or Pipe-Arch, Corrugated Metal	
Projecting from fill (no headwall)	0.9
Headwall or headwall and wingwalls square-edge	0.5
Mitered to conform to fill slope, paved or unpaved slope	0.7
*End-section conforming to fill slope	0.5
Beveled edges, 33° or 45° bevels	0.2

Type of Structure and Design of Entrance	Coefficient k_e
Side- or slope-tapered inlet	0.2
Box, Reinforced Concrete	
Headwall parallel to embankment (no wingwalls)	
Square-edged on 3 edges	0.5
Rounded on 3 edges to radius of 1/12 barrel dimension, or beveled edges on 3 sides	0.2
Wingwalls at 30° to 75° to barrel	
Square-edged at crown	0.4
Crown edge rounded to radius of 1/2 barrel dimension, or beveled top edge.	0.2
Wingwalls at 10° to 25° to barrel	
Square-edged at crown	0.5
Wingwalls parallel (extension of sides)	
Square-edged at crown	0.7
Side- or slope-tapered inlet	0.2

*Note: "End-section conforming to fill slope," made of either metal, concrete or HDPE are the sections commonly available from manufacturers. From limited hydraulic tests they are equivalent in operation to a headwall in both *inlet* and *outlet* control. Some end sections, incorporating a *closed* taper in their design, have a superior hydraulic performance.

The following equation may be used to determine the loss in head in cases where it may be necessary to split or branch the flow into another drain.

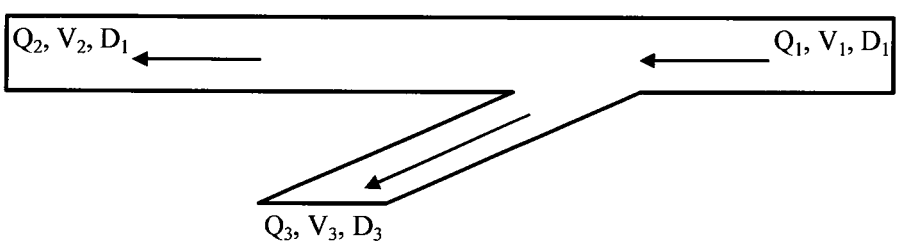

$$H_{br} = cV_1^2/2g$$

(H_{br} denotes Branch Head loss)

Divergence Angle	$Q_3/Q_1 = 0.3$	$Q_3/Q_1=0.5$	$Q_3/Q_1=0.7$
90°	c = 0.76	0.74	0.80
60°	c=0.59	0.54	0.52
45°	c = 0.35	0.32	0.30

f. **Several Entering Flows**

The computation of losses in a junction with several entering flows utilizes the principle of conservation of energy, involving both position energy (elevation of water surface) and momentum energy (mass times velocity head). Thus, for a junction with several entering flows, the energy content of the inflows is equal to the energy content of the outflows plus additional energy required by the collision and turbulence of flows passing through the junction. In addition, when two nearly equal flows enter the junction from opposing directions, head loss is considered as the total velocity head of the outgoing flow.

For example, the total junction losses at the sketched intersection are as follows:

$$H_{J2} = [(Q_4V_4^2) - (Q_1V_1^2) - (Q_2V_2^2) + (KQ_1V_1^2)] / (2gQ_4)$$

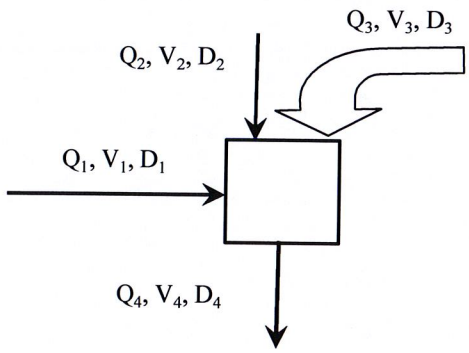

Where:

H_{J2}	= junction losses, ft
$Q_\#$	= discharges, cfs
$V_\#$	= horizontal velocities ft/s
V_3	= is assumed to be zero
K	= bend loss factor

Subscript nomenclature for the equation is as follows:

Q_1 = 90° lateral, cfs

Q_2 = straight through inflow, cfs

Q_3 = vertical dropped-in flow, from an inlet, cfs

Q_4 = main outfall = total computed discharge, cfs

Also assume:

$H_b = K(V_1^2)/2g$ for change in direction.

No velocity head of an incoming line is greater than the velocity head of the outgoing line.

Water surface of inflow and outflow pipes in junction to be level.

When losses are computed for any junction condition for the same or a lesser number of inflows, the above equation will be used with zero quantities for those conditions not present. If more directions or quantities are at the junction, additional terms will be inserted with consideration given to the relative magnitudes of flow and the coefficient of velocity head for directions other than straight through.

g. **Bend Loss**

Bend losses shall be calculated from the following equations:

$$Hb = Kb\ (V2/2g)$$

In which

$K_b = 0.20\ (\Delta/90°)^{0.5}$

Where Δ = Central angle of bend in degrees.

Bend losses should be included for all closed conduits, those flowing partially full as well as those flowing full.

h. **Trashrack Head Loss**

The head loss through a stationary trashrack is commonly determined from the following equation:

$H_{TR} = K_{TR} V^2_n/2g)$

$K_{TR} = 1.45 - 0.45\ A_n/A_g - (A_n/A_g)^2$

Where K_{TR} =: Trashrack coefficient

A_n = Net area through bars, in ft^2

A_g = Gross area of trashrack and supports (water area without trashrack in place), in ft^2

V_n = Average velocity through the rack openings (Q/A_n), in ft/sec

For design, assume that the rack is clogged, thereby reducing the value of A_n by 50%.

9-11 CLOSED CONDUITS

The specific type of pipe or alternate pipe to be used in the development shall be shown on the profile sheets. If the Consulting Engineer or contractor proposes to use any type of pipe not shown on the approved plans, the plans shall be resubmitted to the City for approval. The minimum inside diameter for pipes shall be no less than twelve inches (12"). No storm drain conduit shall have a diameter less than that of the conduit immediately upstream of it. Use of plastic, polyvinyl chloride or high density polyethylene pipes at channel or detention basin outfall shall not be allowed.

A. Material

Publicly maintained drainage systems shall be constructed of the following materials and installed consistent with the latest edition of the City of Winters Construction Specifications:

1. **Reinforced Concrete Pipe**

Class of pipe shall be based upon depth as detailed in the Standard Drawings. Pipe shall conform to ASTM C76, latest revision. The consultant shall specify on the plans that the assembly of joints shall be in accordance with the pipe manufacturer's recommendations and the requirements of ASTM C 443.

2. **Concrete Cast-In-Place-Pipe**

a. Where Concrete Cast-In-Place-Pipe is to be used, a soil report is required for the project that addresses placement of Concrete Cast-In-Place-Pipe. A copy of said soil report must be provided in addition to the items required in sub-section 9 of this Section.

b. The Consulting Engineer shall provide details to the City for connection of the Concrete Cast-In-Place-Pipe to different piping materials as will be used.

c. The minimum wall thickness at all points shall be 1/12 of the nominal internal diameter of the pipe plus one-half inch (1/2"), but in no case less than two inches (2").

d. Under no circumstance shall Concrete Cast-In-Place Pipe be placed in seasonal or permanent groundwater tables.

3. **Polyvinyl Chloride Pipe**

a. Polyvinyl Chloride (PVC) Pipe is not allowed in public storm drain systems.

4. **High Density Polyethylene Pipe**

a. High Density Polyethylene Pipe is not allowed in public storm drain systems.

5. **Metal Pipe**

a. Metal pipe may only be used for roadside access culverts of length less than 60 feet. Metal pipe shall be corrugated steel, corrugated aluminum, corrugated aluminized steel Type II, ribbed steel, ribbed aluminized steel Type II or ribbed aluminum. Metal pipe shall be bedded and initial backfilled with Class 2 aggregate base or crushed rock.

b. Metal -pipe shall be designed for a minimum maintenance free service life of fifty (50) years in accordance with the methods specified in Section 854.3 and 854.4 of the California Department of Transportation Highway Design Manual. To assure that the maintenance free service life is achieved, alternative metal pipe may require added thickness and/or protective coatings. The Consulting Engineer shall provide certified copies of the laboratory report giving the results of pH and resistivity tests. The report shall also include a map showing the location of each site and depth where samples were taken.

c. Unless otherwise specified by the Director, a minimum of two soil samples shall be taken for the first 1,000 lineal feet of pipe or fraction thereof on a project with a minimum of one additional sample being required for each additional 1,000 lineal feet of pipe or fraction thereof. The samples shall be taken along the approximate alignment and at the approximate depth of the pipe to be installed. Priority in sampling shall be given to trunk facilities.

B. Cover Requirements

At locations where the minimum cover requirements cannot feasibly be obtained, the conduit shall be either encased in concrete or provided with a concrete cover or other methods of pipe protection as approved by the Director. Cover shall be measured from the top of a rigid pavement or the bottom of a flexible pavement.

1. **Minimum Cover**

Table 9-3: Minimum Pipe Cover Requirements

Pipe Material Type and Location	Minimum Cover Requirement
Corrugated Metal	Span/8 but not less than 12 inches (12")
Spiral Rib – Steel	Span/3 but not less than twelve inches (12")
Spiral Rib - Aluminum with spans less than or equal to 72"	Span/2 but not less than twelve inches(12")

Pipe Material Type and Location	Minimum Cover Requirement
Spiral Rib - Aluminum with spans greater than 72"	Span/3 but not less than thirty inches (30")
Reinforced Concrete in unpaved areas and under flexible pavements	1/8 the diameter or rise (the greater of) but not less than twelve inches (12")
Reinforced Concrete under rigid pavements	A nine-inch (9") space between top of pipe and bottom of slab consisting of compacted granular fill shall be maintained at a minimum.
Cast-in-Place-Concrete-Pipes in paved areas	The Structural Section plus twenty-four inches (24")
Cast-in-Place-Concrete-Pipes in unpaved areas	Twenty-four inches (24")
Note: All depths shown are for a minimum trench width equal to the outside diameter of the pipe plus sixteen inches (16") measured at the top of the pipe.	

2. **Maximum Height of Cover**

Table 9-4a: Maximum Pipe Cover Requirements - Concrete Pipe

Measured to bottom of trench in feet

DIA.	RCP					Cast In Place
	Class					
	I	II	III	IV	V	
12	Not Permitted	8	12	30	No Limit	No Limit
15		10	15	35		
18		11	16	38		
21		12	17	39		
24		12	18	39		
27		13	19	39		
30		14	19	38		
33		14	20	38		
36		13	17	27	69	
42		14	18	29	62	38
48		15	19	30	60	30
54		16	20	31	58	26
60	14	16	21	31	57	24
66	15	17	22	32	56	21
72	15	18	23	33	56	21
Note: All depths shown are for a minimum trench width equal to the outside diameter of the pipe plus sixteen inches (16") measured at the top of the pipe.						

Table 9-4b: Maximum Pipe Cover Requirements - Metal Pipes

Measured to bottom of trench in feet

DIA.	CMP**					Ribbed Steel Pipe			Ribbed Aluminum Pipe			
	Thickness - inches					Thickness - inches			Thickness - inches			
	0.064	0.079	0.109	0.138	0.168	0.064	0.079	0.109	0.060	0.075	0.105	0.135
12	99	No Limits										
15	99											
18	99											
21	99	99										
24	93	99				36	50	67	21	29	49	64
30	74	93	99			30	40	56	17	24	40	51
36	62	78	99	99		26	35	48	14	21	34	44
42	53	66	93	99		21	31	41	13	18	30	37
48	46	58	81	99	99	20	28	38	12	17	26	34
54	47	52	72	93	99	19	26	34		15	25	31
60	43	53	65	84	99		25	32		14	23	28
66	39	48	68	76	93		22	30			21	26
72	35	42	62	70	85		22	28			20	25

Notes:

1. All depths shown are for a minimum trench width equal to the outside diameter of the pipe plus sixteen inches (16") measured at the top of the pipe.
2. ** Normal pipe corrugation profile is 2 2/3" x *Vi"*. The corrugation of the pipes within the shaded box area shall have profile of 3" x 1" or 5" x I".
3. When flow velocity exceeds five (5) feet per second, the next thicker gauge shall be used for CMP pipe.

3. **Temporary Construction Vehicle Loading**

   a. A note shall be made on the plans stating the minimum cover requirements during construction for temporary construction vehicle loading.

   b. For metal pipes, place at least four feet (4') of cover over the top of the pipe.

   c. For reinforced concrete pipe, place at least three feet (3') of cover over the top of the pipe.

C. **Trench Requirements**

1. Trenches shall be excavated with full depth and vertical sides whenever possible.

2. The minimum trench width shall not be less than the outside diameter of the pipe barrel plus sixteen inches (16"), measured at the top of the pipe. The maximum trench width shall not exceed six (6) nominal pipe diameters, measured at the top of the pipe.

3. In fill areas, or in areas with poor soil conditions where it is anticipated that a good, firm, vertical-walled trench cannot be constructed, the consulting engineer shall design the pipe structural requirements in accordance with good engineering practice. A note shall be placed on the plans directing the contractor to place the proper strength pipe if trench conditions encountered differ from the design trench.

4. Where conditions require side sloping of trenches, the minimum vertical trench shall be from the bottom of the trench to one foot (l') over the top of the pipe.

D. **Spacing Requirements**

When multiple adjacent pipe lines are used, they shall be spaced so that the sides of the pipes shall be no closer than two feet (2'), or for parallel pipes larger than forty-eight inches (48") in

diameter, the spacing shall be one half (1/2) the nominal diameter. This is to permit adequate compaction of backfill material. Special bedding and backfill considerations shall be taken when depths of parallel pipes vary.

E. **Alignment Requirements**

1. The location of storm drainage pipelines in new streets shall be approximately one and one-half feet (1½') behind the face of curb. The storm line shall be placed to enter the curb inlets at the center of the box.
2. All new storm drains shall be placed a minimum of one hundred feet (100') from existing and proposed water wells. Encroachments less than one hundred feet (100') require approval of the Environmental Management Department prior to plan approval.
3. Meandering and unnecessary angular changes of pipelines shall be avoided. Angular changes, when necessary, shall not exceed 90 degrees unless approved by the Director. No angular changes in direction are allowed for Concrete Cast-In-Place-Pipe other than on a radius.
4. Pipeline Radius Criteria: All pipe placed on curves shall meet manufacturer's recommendations for curved alignment. All curves, radii, length of pipe joints, and types of pipe shall be shown on the plans. The minimum radius of curvature for Concrete Cast-In-Place-Pipe shall be determined by the formula R = 30D where R = radius of curvature, and D = nominal internal pipe diameter, with R and D expressed in the same units.
5. Pipelines shall be laid "straight in both horizontal and vertical planes between manholes unless otherwise approved by the Director.
6. Where storm drain pipelines of different diameter join, the invert elevations shall be adjusted to maintain a uniform energy gradient.
7. In some situations, pipelines may be placed in alternative locations, including under curb and gutter, as approved by the Director.

F. **Velocity**

1. The minimum full flow velocity shall be no less than two (2) feet per second. The maximum velocity shall be less than the critical velocity at full flow.
2. When full-flowing pipelines that produce velocities greater than twelve (12) feet per second are approved by the Director, special provisions shall be taken to prevent erosion or pipe displacement and to keep the EGL contained underground.

G. **Entrances and Exits**

1. Headwalls and other structures shall be designed to increase hydraulic efficiency, prevent erosion adjacent to the conduit and provide a counterweight to prevent flotation.
2. When a drop inlet is not installed, flared end sections should be used. Headwalls may be used where dictated by physical conditions. Both installations shall conform to the State Standard Plans.
3. Where exits are necessary, headwalls or flared end sections should be used for culverts. Where drainage systems discharge into a channel, standard headwalls shall be installed per the State Standard Plans. The vertical face of the headwall shall be set back a sufficient distance from the channel side slope to accommodate flapgates in a fully opened position without encroachment of the flap past the channel side slope face.
4. Energy dissipation shall be designed at outlets where velocities are erosive.

H. **Water and Soil Tight System**

1. All storm drain pipe, manholes, and fitting connections, including drain inlet laterals shall be water and soil tight and tested in conformance with Section 38-10 of the Construction Specifications.
2. A note shall be placed on the improvement plans stating these requirements and that the contractor is responsible for providing equipment and labor for performing tests and making measurements when directed to do so by the City's inspector.

I. Bores and Jacked Pipe

All conductor or casing pipes shall be sealed at both ends in such a manner as to provide waterproof seal.

9-12 MANHOLES

Requirements for manholes are as follows:

A. Standard precast concrete or saddle type manholes shall be used except where special manholes or junction boxes are required. The design must be submitted to the Director for approval.

B. In no case will junction boxes or manholes be allowed which are smaller than forty-eight inches (48") greatest inside dimension. Design engineer may be required to submit specific structure designs for manholes on larger pipes or multi-pipe intersections.

C. Manholes on intersections of pipe or multiple pipelines larger than 42" may require riser barrels greater than 48" diameter.

Precast concrete manholes shall be manufactured in accordance with ASTM C 478. Cast-in-place manholes shall conform to drawings 9-3 and 9-4. Cast-in-place manholes on 60" diameter pipe or larger shall be Type 'B' Saddle Manholes per Drawing 9-4.

D. Manholes shall be located at junction points, angle points greater than 15 degrees, and changes in conduit size or materials. On curved pipes with radii of 200-feet to 400-feet, manholes shall be placed at the B.C. and E.C. and on 300-feet maximum intervals along the curve. On curves with radii exceeding 400-feet, manholes shall be placed at the B.C. and E.C. and on 400 feet maximum intervals along the curve for pipes twenty-four inches (24") and less in diameter and 500-feet maximum intervals along the curve for pipes greater than twenty-four inches (24") in diameter. Manhole spacing on curves with radii less than 200-feet will be determined on an individual basis.

E. Spacing of manhole, junction boxes or inlets of such size as to be accessible for maintenance shall not exceed 400-feet for drains fifteen inches (15") and smaller in diameter, 500-feet for drains between eighteen inches (18") and thirty-six inches (36") in diameter, and 600-feet for pipes greater than forty-two inches (42") in diameter. The spacing of manholes shall be nearly equal whenever possible. Manholes shall not be placed in roadway intersections unless necessary as a junction point.

F. All manholes and junction boxes other than inlets shall have standard manhole frames and covers as shown in drawing 7-2. Lid shall be labeled with "STORM" lettering.

G. Manholes will not be allowed in the gutter flow line.

H. A reinforced concrete lid as shown on Standard Drawing 9-4 shall be required when any pipe would enter the manhole above any portion of the base of a manhole cone.

I. Slotted manhole covers may be used to pick up minor drainage in non-traffic areas, including on-site drainage on residential lots. Covers shall conform to drawing 9-7.

J. Improvement plans shall include a special detail for all manholes at junction points where there is a change in pipe direction and pipe diameter exceeds forty-eight inches (48").

K. The maximum manhole chimney height is eighteen inches (18").

L. Resilient connectors are required between the manhole and pipe except in the case of type of Type B Saddle Manholes (drawing 9-4). The resilient connector is manufactured in accordance with ASTM C 923. Use of non-shrinking or expansive grout for making connections of pipe and water stop to manhole walls is required.

9-13 JUNCTION BOXES

Drop inlets may be used as junction boxes provided that no pipe entering or leaving the box is larger than 18 inches inside diameter. For any junction box with a pipe 21 inches or larger in diameter, the inlet shall have a manhole base and top slab. The inlet shall be mounted on top of the top slab. All other non-inlet junction boxes shall conform to the requirements for manholes.

9-14 INLETS

The standard curb inlet shall be "Santa Rosa" grateless inlet as specified in Drawings 9-12. Combination grate and curb-inlets may be required on steeply sloped streets (generally greater than 4%) when high velocity street flows require energy dissipation and a larger inlet area. Grate only inlets shall NOT be used in sump conditions to avoid complete clogging of the drain. All inlet selections other than "Santa Rosa" style require approval by the City Engineer.

Requirements for inlets are as follows:

A. Inlets shall be placed so that the length of flow in the gutter does not exceed 500-feet in either direction. The flow rate used to check the depth shall include any runoff that may by-pass upstream grates. Exceptions to the 500-feet limit standard may be granted by the Director or City Engineer.

B. The figure below is a cross section of a typical compound gutter.

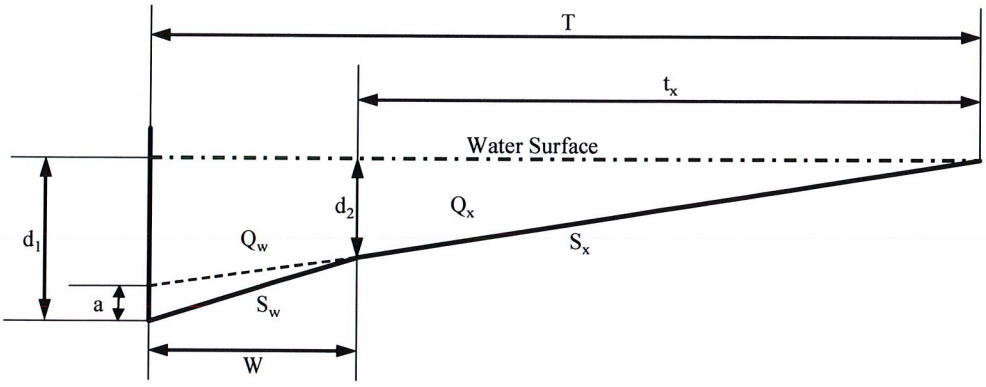

Figure: Flow in Compound Gutters

The equations for determining spread and depth in compound gutter sections are given below.

$$d_1 = TSx + a$$

$$S_w = a/W + Sx$$

$A = (T2Sx + Wa)/2$

$d_2 = (T\text{-}W)Sx$

$t_s = (Qsn/0.56Sx5/3S1/2)3/8$

$Q = Qw+Qs$

$Q_s = 0.56[(T - W)Sx]2.67S0.5/nSx$

$Q_w = 0.56\{(TSx + a)2.67 - [(T - W)Sx]2.67\}S0.5/n(a/W + Sx)$

Where:

T = width of flow or spread, ft

S = longitudinal slope, ft/ft

Q = gutter flow rate, cfs

Q_w = depressed section flow, cfs

Q_S = gutter capacity above depressed section, cfs

S_x = pavement cross slope, ft/ft (typically 0.02)

S_w = depressed section slope, ft/ft

W = width of depressed gutter section, ft

a = gutter depression, ft

d_1 = depth of water at curb, ft

d_2 = depth of water at change in section slope, ft

n = Manning's roughness coefficient (typically 0.016)

t_s = width of flow or spread beyond depressed section, ft

C. A clogging factor of fifty percent (50%) shall be used when computing the interception capacity of the inlet.

D. The connector pipe from inlets at sag points shall be sized to accommodate the design runoff taking into consideration by-pass flow from upstream inlets.

E. Caltrans type OCP or OCPI, Sheet D75B, inlets shall be used in unimproved medians, and may be used in roadside ditches away from driveway locations and in back lot situations.

F. Curb opening catch basins with grating(s) and debris skimmer, Caltrans type GO, Sheet D74B, shall be used in locations where additional inlet capacity beyond what a single "Santa Rosa" inlet can intercept. If further grate capacity is required then Caltrans type GT4, Sheet D74A, may be considered.

G. Inlets in streets shall be placed at lot lines in residential subdivisions, except at intersections where they shall be placed at the curb return.

H. A minimum horizontal distance of eight feet (8') along the trunk line must separate laterals.

9-15 PIPE STUBS

The criteria for pipe stubs shall be as-follows:

A. Temporary pipe stubs shall be two (2) sizes larger than the permanent pipe and a flared end section or a corrugated drop inlet shall be used at the entrance.

B. A headwall and trash rack shall be required where the upstream pipe ends at a park or open field.

C. Whenever a pipe stub is required, all ditches and swales shall be "trained" toward the stub.

D. Pipe stubs shall be as deep as possible to provide for future extension.

E. Flared end sections shall be required for the upstream/downstream end of a pipe system that does not connect to an existing pipe system or channel.

9-16 HEADWALLS, WINGWALLS, ENDWALLS, TRASH RACKS, ACCESS CONTROL RACKS AND RAILINGS

The requirements for these facilities are as follows:

A. All headwalls, wingwalls and endwalls shall be considered individually and in general shall be designed in accordance with the Caltrans Standards and Specifications.

B. Trash racks will be provided where they are necessary to prevent clogging of culverts and storm drains and eliminate hazards. Trash racks shall be designed such that the ratio of trash rack open area to drain opening is at a minimum four to one (4:1).

C. Access control racks shall be required on pipes twenty-four inches (24") or larger and shall be designed such that the ratio of access control rack open area to drain opening is at a minimum four to one (4:1).

D. The Director may require metal beam guardrail or chain link fencing at culverts, headwalls, box culverts, and on steep side slopes. Installation shall be in accordance with the Caltrans Standards.

9-17 DRAINAGE PUMPS

Drainage pumping plants shall be designed in accordance with the latest edition of the Hydraulic Institute Standards and as specified by the Director. Consideration shall be given to the following minimum criteria:

- Redundant pumping capability.
- Back up power supply or natural gas or diesel driven engines.
- Trash cleaning from waste stream during pumping operations.
- Automate control system and telemetry for alarm notification, including integration into any existing SCADA system.
- Minimum life-cycle costs for the pumping facilities including construction costs.
- Site security and lighting.
- Aesthetics such as landscaping and fencing.

At the direction of the Director, all pump stations shall include Supervisor Control and Data Acquisition (SCADA) with real-time communication to the City's master computer and alarm auto-dialer system. The real-time communication system shall be via the City's existing radio network.

All automated controllers, antennae and radios shall be of a make and model 100% compatible with the City's SCADA system. The system shall be approved by the City and the City reserves the right to specify the equipment to be installed in the pump station.

The City shall make all necessary modification to the master computer and alarm auto-dialer to incorporate the new station and the cost of these modifications shall be borne by the developer.

9-18 DETENTION SYSTEMS

Detention system designs require the approval of the Director. Consideration shall be given to the following minimum criteria:

- Storage volume based on 100 year storm; critical storm duration to be determined based on analysis of rainfall and runoff patterns for the entire storm season.
- Peak discharge shall not exceed 95% of the undeveloped or pre-existing peak flow from the 1-day, 100-year event.
- 1' minimum freeboard, increased as required to account for wave action in the primary storm wind direction.
- Overflow elevation and route to be at least 1' below any affected buildings.
- 3:1 maximum earth side slopes where exposed to water.
- 20' wide perimeter buffer with all-weather access road around entire basin; including access road to basin bottom for maintenance during dry periods.
- Outlet control facilities to consist of gated gravity release (preferred) and pumped when unavoidable. Nominal pumping facilities required to empty pond if it doesn't empty by gravity flow.
- Any required pumping facilities to meet above requirements for Drainage Pumps.
- Minimum life-cycle costs for the detention facilities including construction costs.
- Temporary and permanent erosion control and landscaping.
- Site fencing to prevent unauthorized entry.

9-19 OPEN CHANNELS

A. Open channels are required whenever one or more of the following applies:

1. The design flow rate exceeds the capacity of a seventy-two inch (72") pipe.
2. The outfall is at an elevation such that minimum cover cannot be obtained over the pipe.
3. City policy or project approvals require the channel to remain natural.

B. Open channels shall consist of natural earth channels, lined bottom channels or concrete lined channels as approved by the Director.

C. Criteria for open channels shall be as follows:

1. Open channel design shall include a water surface profile analysis using the Corps of Engineers HEC RAS computer program or their UNET program or other hydraulic program if approved by the Director.
2. Open channels shall be designed to convey the 100-year flood event with a minimum one-foot (1') of freeboard. The Director or FEMA may specify additional freeboard requirements.
3. Minimum velocity: Two-feet per second (ft/s)
4. Maximum velocity:
   a. Earth channels, six ft/s
   b. Lined channels, ten ft/s

c. Bottom-lined channels, eight ft/s

5. The Consulting Engineer shall determine if a need for super elevating the outside bank on bends is required.

6. The centerline curve radius of an open channel shall be equal to or greater than twice the bottom width (thirty -five foot (35') minimum).

7. Natural earth channels shall be vegetated with native grasses or other permanent vegetative cover as determined by the Director.

8. Channels shall be constructed to a typical cross section. Fully lined channels shall be designed with side slopes of 1 horizontal to 1 vertical (1:1); channels with unlined sides shall be designed with side slopes of 3 horizontal to 1 vertical (3:1) or flatter. Any exceptions shall be subject to approval by the City Engineer.

9. All channels shall have a minimum bottom width of six feet (6') and shall have access ramps for maintenance equipment. An access ramp is required between each set of culverts or other above grade channel obstructions and at the upstream and downstream ends of the channel. Drawing 9-18 shows the typical ramp and transition detail. A fifteen foot (15') all weather service road shall be provided. Roads having a radius tighter than forty-two feet (42') shall require additional width as determined by the Director.

10. For all channels, either improved or natural, the following items shall be shown on improvement plans in addition to information heretofore required:

    a. Typical sections and cross-sections.

    b. Profile of the existing channel and top of bank profile for a minimum of 1,000-feet each side of the development in order to establish an average profile grade through the development. The Consulting Engineer shall contact the City for profiles of major drainage channels.

    c. Interceptor Ditches - Interceptor ditches or approved alternates shall be placed at the top of the cut or bank where deemed necessary by the Director to prevent erosion of the channel bank. Runoff shall not be allowed to "sheet drain" over top of bank.

11. Erosion Protection – All natural or graded surfaces disturbed by construction operations shall be protected from erosion by installation of temporary and permanent erosion control improvements. Drawings 9-19 and 9-20 show details for both pipe and ditch discharge erosion.

9-20 OUTFALL DESIGN

Requirements for outfall design are as follows:

A. All drainage outfalls shall be shown in plan and profile on the improvement plans for a distance of 1,000 feet or until a definite "daylight" condition is established.

B. All existing and proposed drainage ditches upstream and downstream of the improvement shall be shown on the plans and profile for a distance of at least 500 feet or until an average profile grade through the improvement is established.

C. The profiles shall include ditch flow-line and top of bank elevations (right and left when different).

D. When improvements have more than one unit or phase, the drainage outfall shall be shown as extending to the property boundary and beyond, if required, although it may not be constructed

with the current unit development. All temporary outfalls shall be shown in both plan and profile on the improvement plans.

9-21 FENCING REQUIREMENTS

The requirements for fencing (see drawings 9-21 and 9-22) shall be as follows:

A. Detention facilities, pumping stations and improved channels exceeding three feet (3') in depth and with side slopes steeper than 3:1 shall be fenced with six foot (6') chain link or other suitable open style fencing. The approval of the Director is necessary for other suitable open style fencing.

B. In all other areas, fencing shall be placed only upon the recommendation of the Director.

C. Drive gates shall be minimum 12-feet (12') wide, and walk gates shall be 4-feet (4') wide minimum. Drive gates shall be set a minimum of 20-feet (20') back from the edge of pavement to allow for a safe parking area off of the traveled way while opening /closing gates. AC paving shall be provided between the traveled way and drive gate. AC paving design shall be per Section 4 - STREETS of these Improvement Standards.

D. Fences shall be located 6-inches (6") inside the drainage right-of-way and easement lines and a minimum one-foot (1') from top of bank.

9-22 CROSS CULVERT CRITERIA

The design of cross culverts shall be as follows:

A. Cross culverts shall be designed in accordance with procedures outlined in the U.S. Department of Transportation "Hydraulic Design of Highway Culverts," Hydraulic Design Series No. 5, September, 1985.

B. Cross culvert size shall be determined based-on runoff-as specified in these standards.

C. Cross culverts shall be checked against 100-year run off to assure, that no adverse effect will occur upstream and downstream because of the higher design event.

D. Cross culvert profile will be determined by an examination of the overall profile of the channel for a minimum distance of 500-feet on each side of the installation.

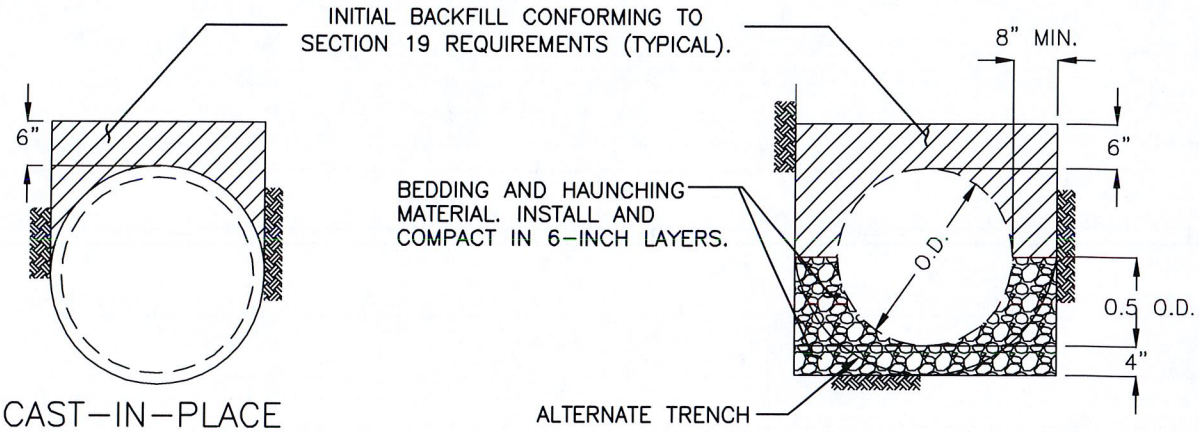

CAST-IN-PLACE CONCRETE PIPE

PIPES 24" OR GREATER IN DIAMETER

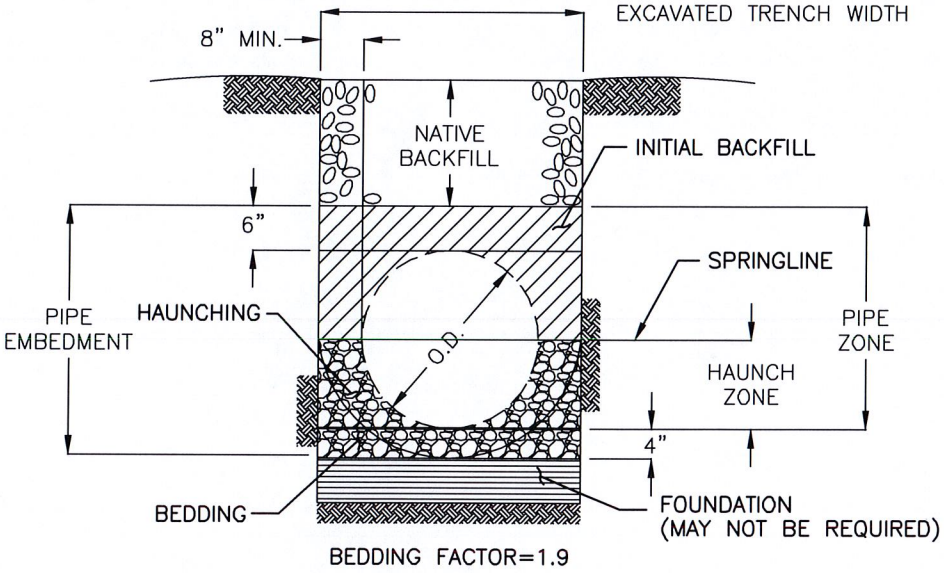

PIPES LESS THAN 24" IN DIAMETER

NOTES

1. INITIAL BACKFILL MATERIAL SHALL BE THOROUGHLY COMPACTED AROUND PIPE.
2. TRENCH WIDTH SHALL CONFORM TO CONSTRUCTION SPECIFICATION SECTION 19.
3. BEDDING AND HAUNCHING SHALL BE CL2 AB OR ½" OR ¾" CRUSHED ROCK. BEDDING AND INITIAL BACKFILL MATERIAL SHALL BE NATIVE MATERIAL PER SECTION 19, CLASS 2 AB OR ½" OR ¾" CRUSHED ROCK.
4. INITIAL BACKFILL FOR METAL PIPE SHALL BE CRUSHED ROCK OR CLASS 2 AB.

City of Winters *PUBLIC WORKS DEPARTMENT*	DATE: DEC 2015
PIPE BEDDING AND INITIAL BACKFILL (DRAINAGE)	SHEET # 1 OF 1
CITY ENGINEER APPROVED Nicholas J. Ponticello P.E. NO. 49584	DRAWING #: 9-1

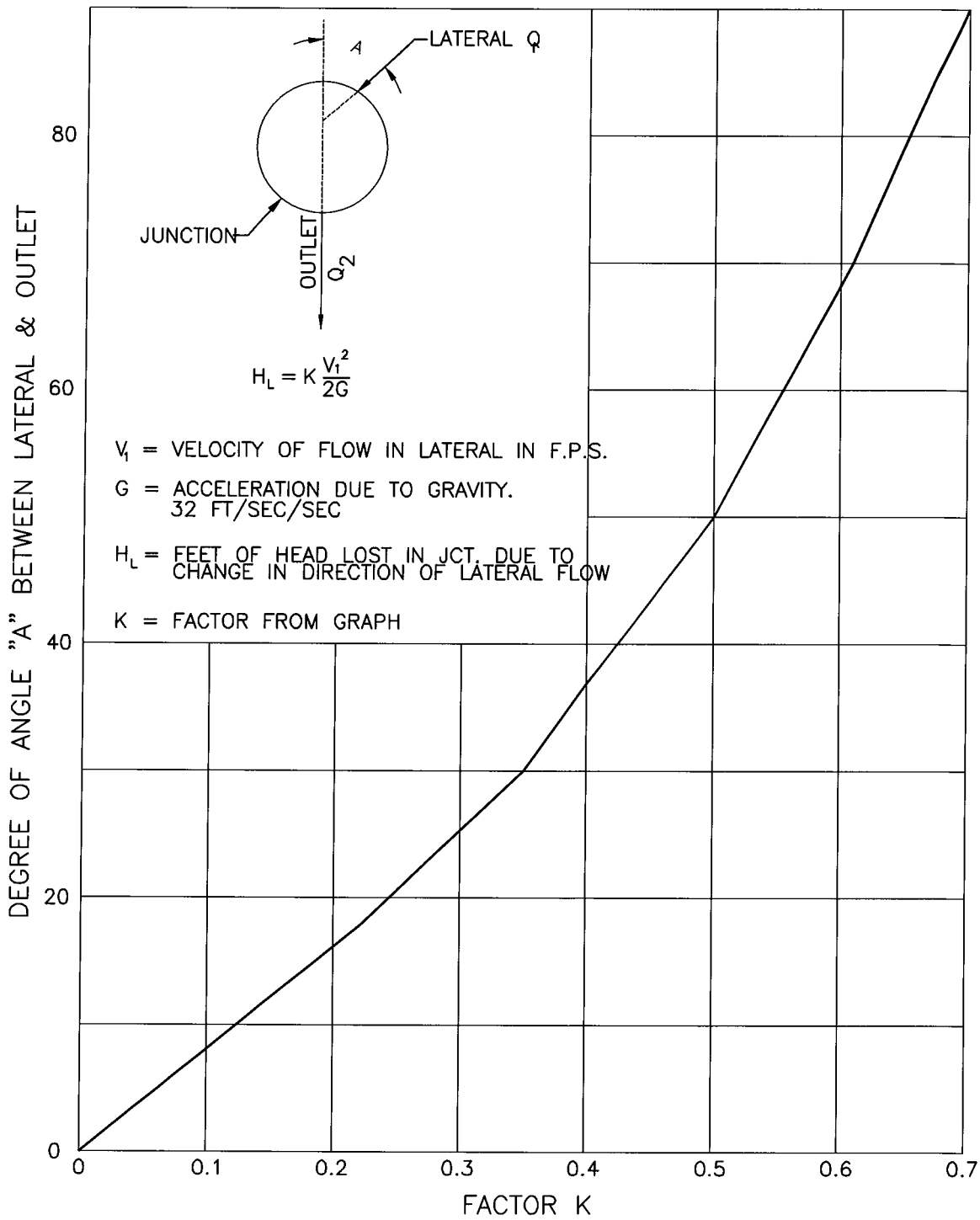

City of Winters *PUBLIC WORKS DEPARTMENT*	DATE: DEC 2015
LOSS IN JUNCTION DUE TO CHANGE IN DIRECTION OF FLOW IN LATERAL	SHEET # 1 OF 1
CITY ENGINEER APPROVED Nicholas J. Ponticello P.E. NO. 49584	DRAWING #: 9–2

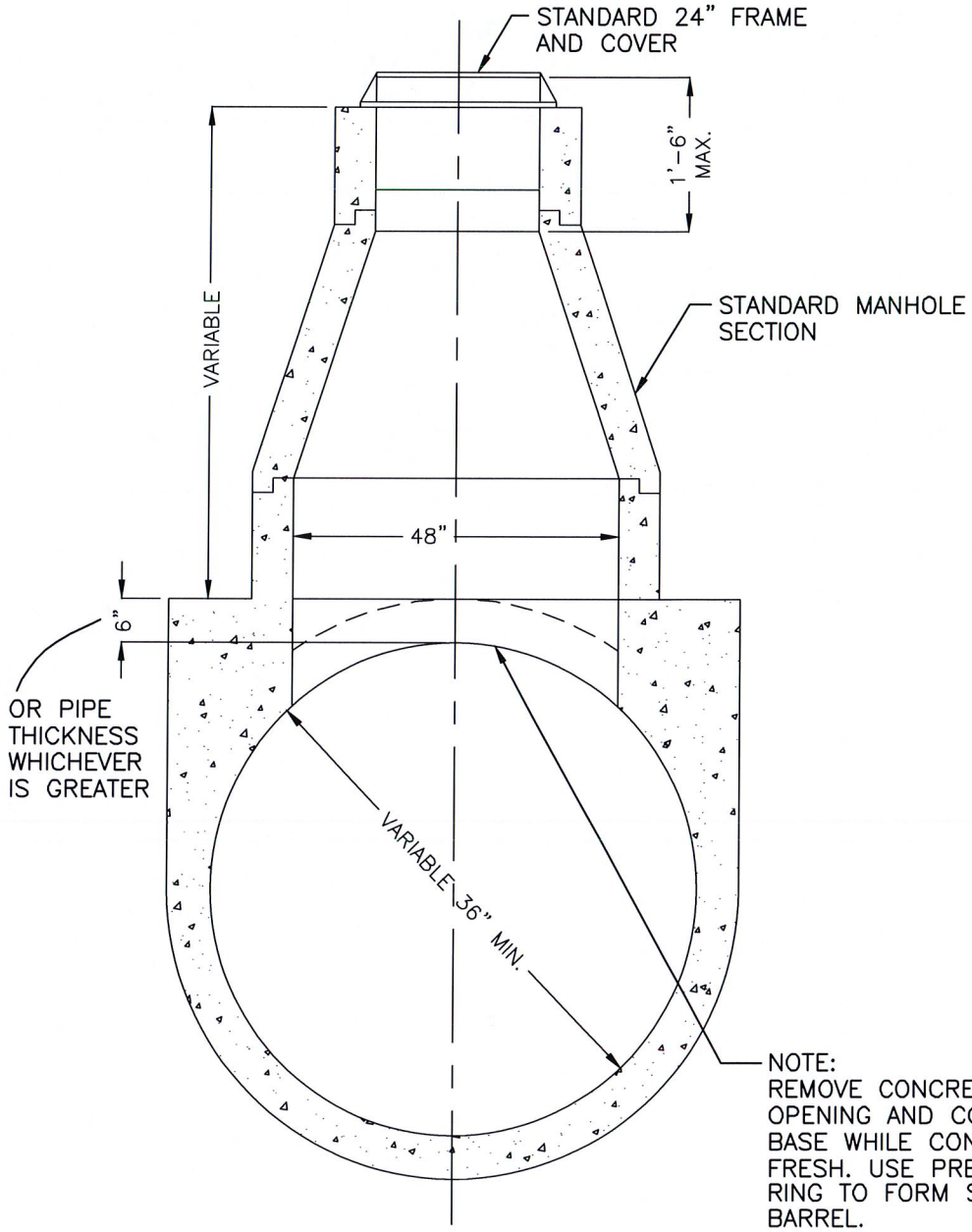

NOTE:
REMOVE CONCRETE IN MANHOLE OPENING AND CONSTRUCT RISER BASE WHILE CONCRETE IS STILL FRESH. USE PREFORMED IMPRESSION RING TO FORM SEAT FOR FIRST BARREL.

PLACE RISER SECTION AFTER CONCRETE HAS SET.

TYPE A
CAST-IN-PLACE PIPE ONLY

USE STD PLAN 7-1 FOR STORM MANHOLE WITH PIPES SMALLER THAN 36" I.D.

City of Winters *PUBLIC WORKS DEPARTMENT*	DATE: DEC 2015
TYPE A SADDLE MANHOLE	SHEET # 1 OF 1
CITY ENGINEER APPROVED Nicholas J. Ponticello P.E. NO. 49584	DRAWING #: 9-3

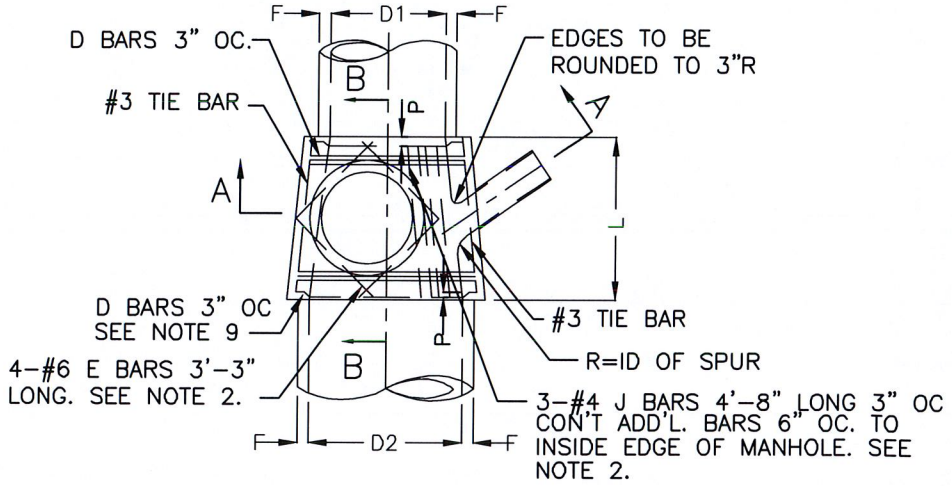

PLAN

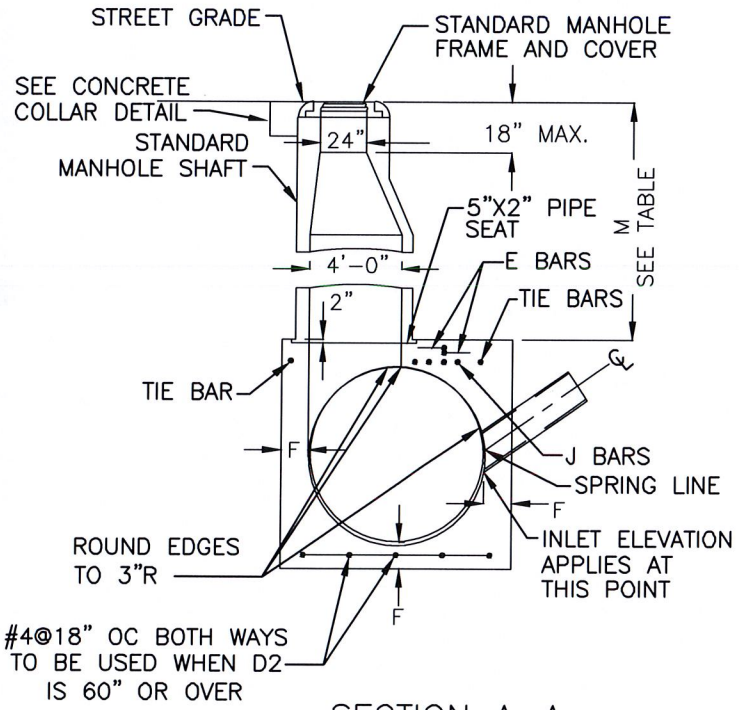

SECTION A–A

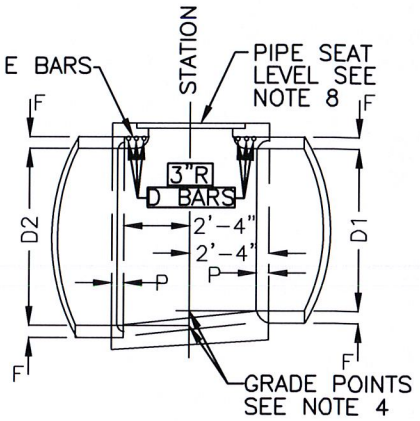

SECTION B–B

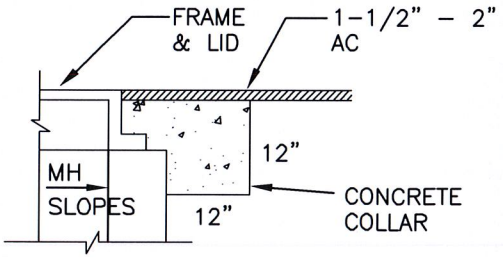

CONCRETE COLLAR DETAIL

USE STD DWG 7-1 FOR STORM MANHOLES WITH PIPES SMALLER THAN 36" I.D.

City of Winters *PUBLIC WORKS DEPARTMENT*	DATE: DEC 2015
TYPE B SADDLE MANHOLE (MAIN LINE ID = 48" OR LARGER)	SHEET # 1 OF 3
CITY ENGINEER APPROVED Nicholas J. Ponticello P.E. NO. 49584	DRAWING #: 9-4

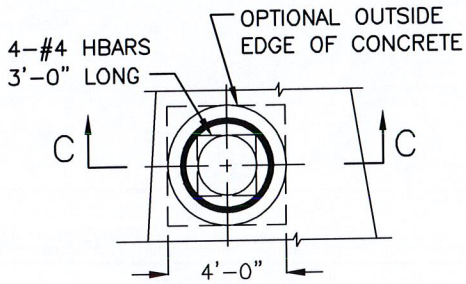

DETAIL "N"

(RINGS AND COVER NOT SHOWN)
(SEE NOTE 1)

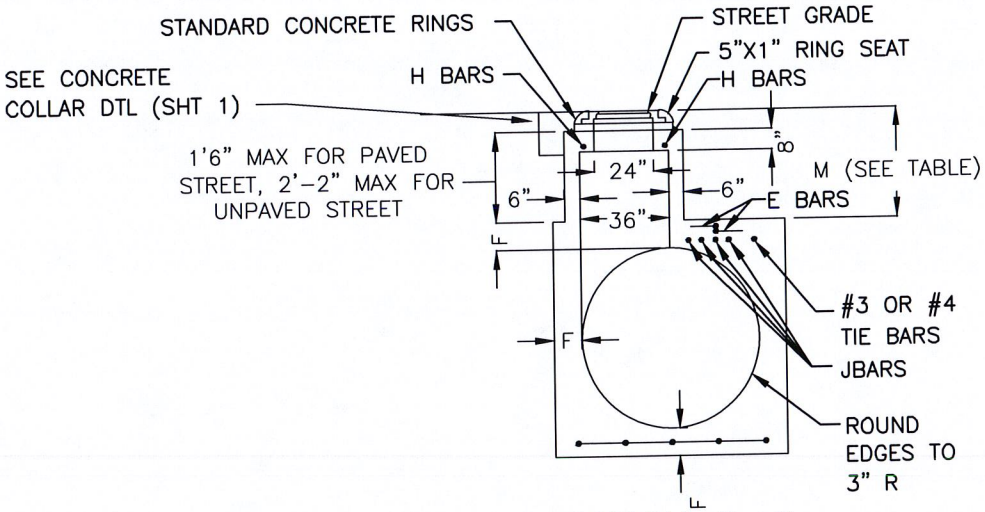

SECTION C-C

TABLE OF VALUES FOR F			
D2	F	D2	F
48"	8"	90"	13-1/4"
51"	8-1/2"	96"	14"
54"	9"	102"	15-1/2"
57"	9-1/4"	108"	16"
60"	9-1/2"	114"	16-1/2"
63"	10"	120"	17"
66"	10-1/4"	126"	17"
69"	10-3/4"	132"	17-1/2"
72"	11"	138"	17-1/2"
78"	11-3/4"	144"	18"
84"	12-1/2"		

TABLE OF VALUES FOR M (SEE NOTE 1)				
SECTION	PAVED STREET		UNPAVED STREET	
	MAX.	MIN.	MAX.	MIN.
A-A		2'-10 1/2"		3'-6"
C-C	16"	8 1/2"	16"	12"

City of Winters
PUBLIC WORKS DEPARTMENT

TYPE B SADDLE MANHOLE
(MAIN LINE ID = 48" OR LARGER)

CITY ENGINEER APPROVED Nicholas J. Ponticello P.E. NO. 49584

DATE: DEC 2015

SHEET # 2 OF 3

DRAWING #: 9-4

NOTES:

1. WHEN DEPTH M FROM STREET GRADE TO THE TOP OF THE BOX IS LESS THAN 2'–10½" FOR PAVED STREETS OR 3'–6" FOR UNPAVED STREETS, CONSTRUCT MONOLITHIC SHAFT PER SECTION C–C AND DETAIL "N". WHEN DIAMETER D_1 IS 48", CENTER OF SHAFT MAY BE LOCATED PER NOTE 2.
2. CENTER OF MANHOLE SHAFT SHALL BE LOCATED OVER CENTER LINE OF STORM DRAIN WHEN DIAMETER D_1 IS 48" OR LESS. IN WHICH CASE PLACE E BARS SYMMETRICALLY AROUND SHAFT AT 45° WITH CENTER LINE AND OMIT J BARS.
3. L AND P SHALL HAVE THE FOLLOWING VALUES UNLESS OTHERWISE SHOWN ON THE PROJECT DRAWINGS:
   D_2 =96" OR LESS, L=5'–6", P=5"
   D_2 OVER 96", L=6'–0", P=8"
   L MAY BE INCREASED OR LOCATION OF MANHOLE SHIFTED TO MEET PIPE ENDS. WHEN L GREATER THAN THAT SHOWN ABOVE IS SPECIFIED, D BARS SHALL BE CONTINUED 6" OC.
4. STATIONS OF MANHOLES SHOWN ON PROJECT DRAWINGS APPLY AT CENTER LINE OF SHAFT. ELEVATIONS ARE SHOWN AT CENTER LINE OF SHAFT AND REFER TO THE PROLONGED INVERT GRADE LINES.
5. REINFORCEMENT SHALL CONFORM TO ASTM A 615, GRADE 40 AND SHALL TERMINATE 1½" CLEAR OF CONCRETE SURFACES UNLESS OTHERWISE SHOWN.
6. FLOOR OF MANHOLE SHALL BE STEEL TROWELED TO SPRING LINE.
7. BODY OF MANHOLE SHALL BE POURED IN ONE CONTINUOUS OPERATION EXCEPT THAT A CONSTRUCTION JOINT WITH A LONGITUDINAL KEYWAY MAY BE PLACED AT SPRING LINE.
8. THICKNESS OF THE DECK SHALL VARY WHEN NECESSARY TO PROVIDE A LEVEL SEAT BUT SHALL NOT BE LESS THAN THE TABULAR VALUES FOR F SHOWN ON DRAWING 9–7 SHEET 1.
9. D BARS SHALL BE #4 FOR D_2 =39" OR LESS, #5 FOR D_2 =42" TO 84" INCLUSIVE AND #6 FOR D_2 =90" OR OVER.
10. CENTER LINE OF LATERAL PIPE SHALL INTERSECT INSIDE WALL OF MANHOLE AT SPRING LINE UNLESS OTHERWISE SHOWN.
11. THE FOLLOWING CRITERIA SHALL BE USED FOR THIS MANHOLE:
    A. MAIN LINE=48" INSIDE DIAMETER OR LARGER.
    B. THE OUTSIDE DIAMETER OF THE LATERAL MUST BE LESS THAN OR EQUAL TO ½ THE INSIDE DIAMETER OF THE MAIN LINE. IF THE UPSTREAM AND DOWNSTREAM DIAMETERS OF THE MANHOLE ARE NOT THE SAME, THE GOVERNING INSIDE DIAMETER OF THE MAIN LINE SHALL BE CONSIDERED TO BE THAT WHERE THE EXTENDED CENTER LINE OF THE LATERAL ENTERS THE MANHOLE.
    C. IN NO INSTANCE SHALL THE INSIDE DIAMETER OF THE LATERAL TO THE MANHOLE BE GREATER THAN 30".

City of Winters *PUBLIC WORKS DEPARTMENT*	DATE: DEC 2015
TYPE B SADDLE MANHOLE (MAIN LINE ID = 48" OR LARGER)	SHEET # 3 OF 3
CITY ENGINEER APPROVED Nicholas J. Ponticello P.E. NO. 49584	DRAWING #: 9–4

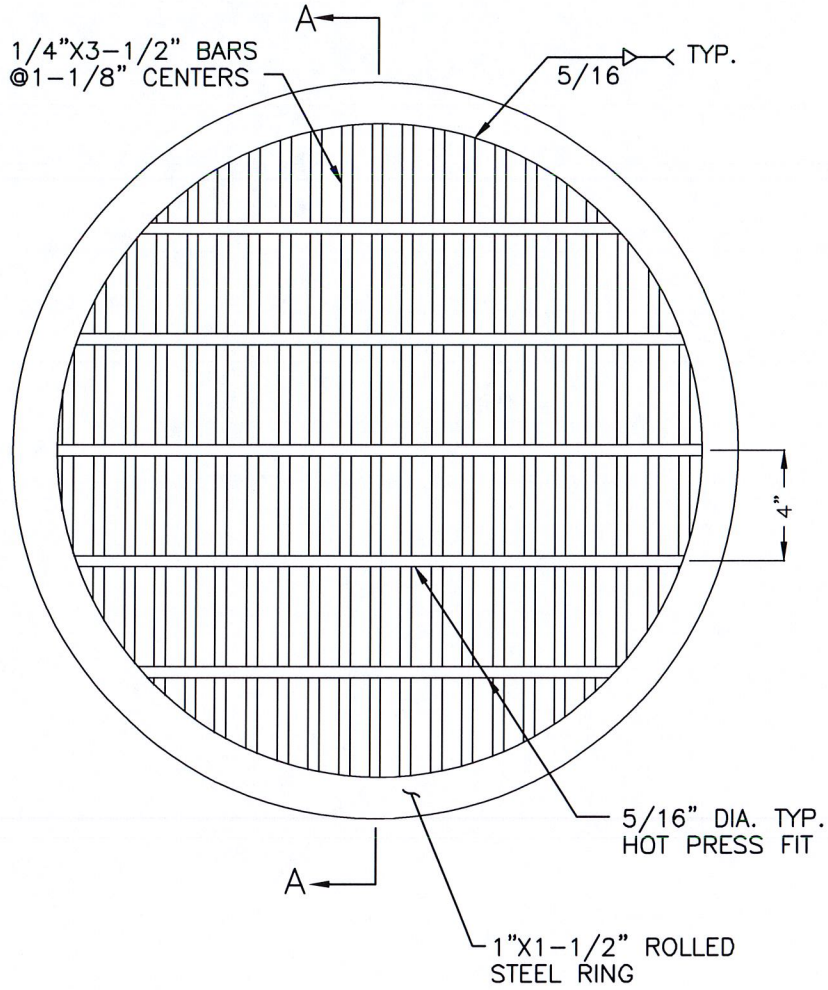

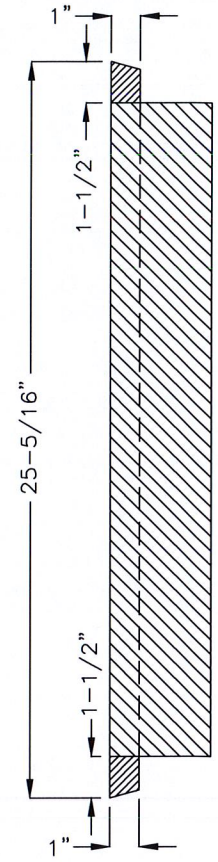

SECTION A-A

%%UNOTES 1. MANHOLE COVER SHALL FIT FRAME SHOWN ON DRAWING 9-5. 2. SEATING SURFACES SHALL BE MACHINED AS SHOWN IN DETAIL ON DRAWING 9-5. 3. THIS COVER MAY BE USED ONLY WITH APPROVAL OF DIRECTOR. 4. GALVANIZE AFTER FABRICATION PER ASTM 123.

City of Winters *PUBLIC WORKS DEPARTMENT*	DATE: DEC 2015
GRATE TYPE MANHOLE COVER	SHEET # 1 OF 1
CITY ENGINEER APPROVED Nicholas J. Ponticello P.E. NO. 49584	DRAWING #: 9-7

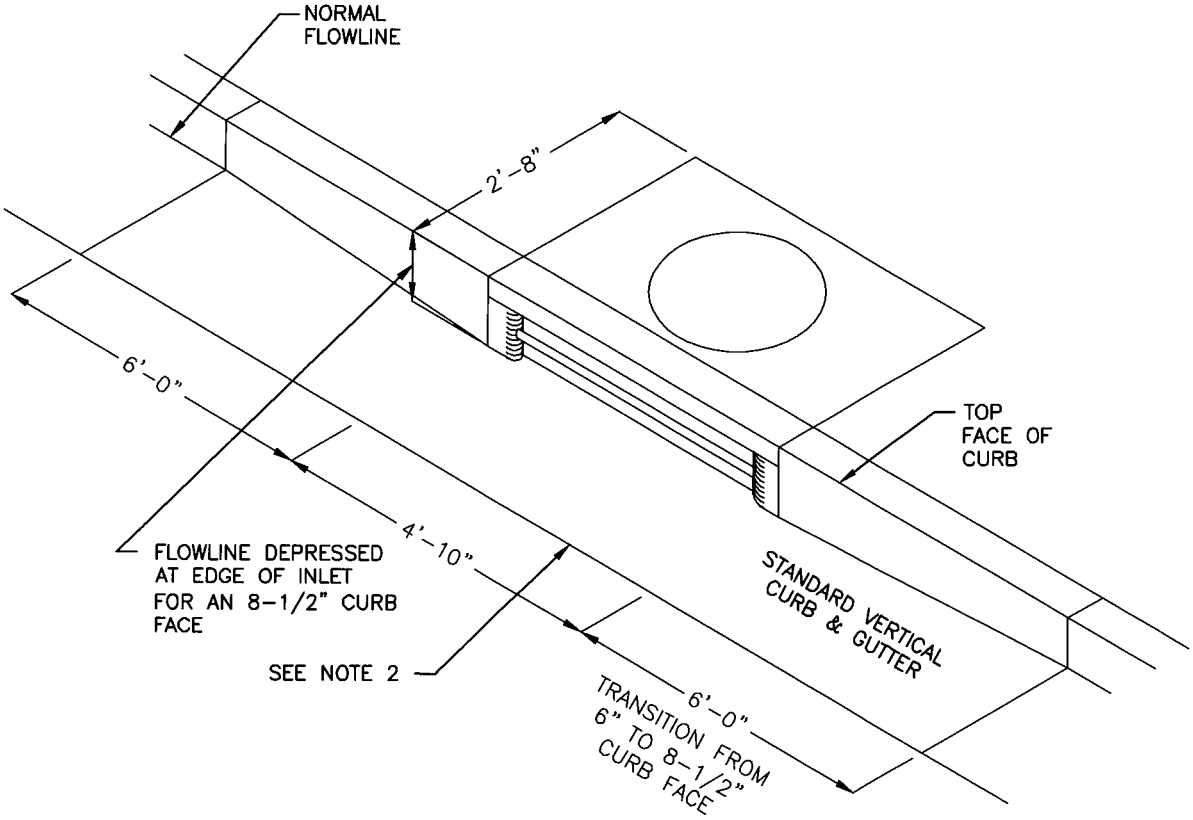

NOTES:

1. WHEN AT CURB RETURN, FACE OF BOX SHALL BE ON TANGENT.
2. LIP OF GUTTER SHALL NOT BE DEPRESSED ACROSS FACE OF INLET.
3. INLET MODEL SHALL BE SANTA ROSA MODEL 4A OR TEICHERT MODEL CB4-2 (2'X4') OR APPROVED EQUAL WITH GUARD ROD AND FORM FOR FLOW LINE.
4. INLET COVER SHOULD BE CONCRETE WITH CAST IRON FRAME RING AND NPDES LOGO.

City of Winters *PUBLIC WORKS DEPARTMENT*	DATE: DEC 2015
CURB INLET	SHEET # 1 OF 3
CITY ENGINEER APPROVED Nicholas J. Ponticello P.E. NO. 49584	DRAWING #: 9-12

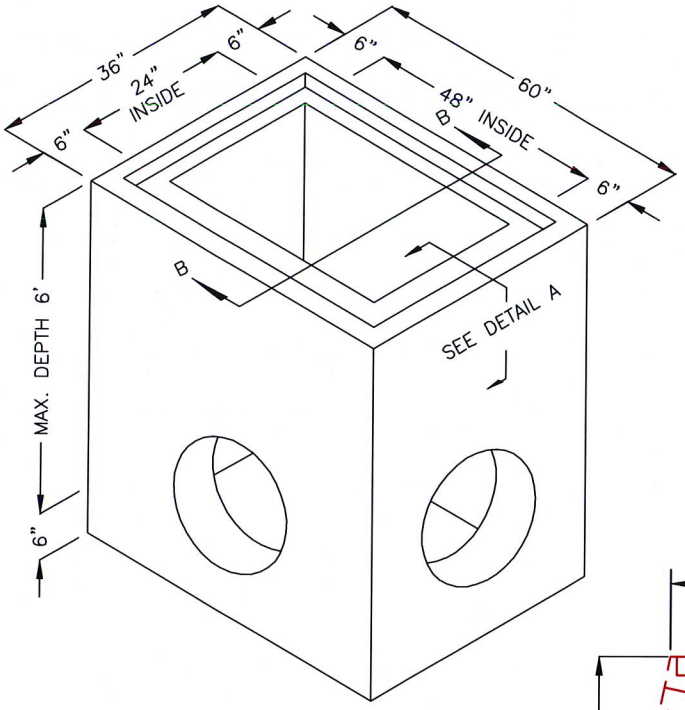

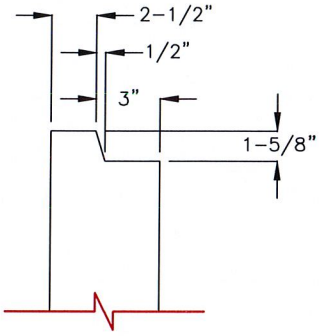

DETAIL A

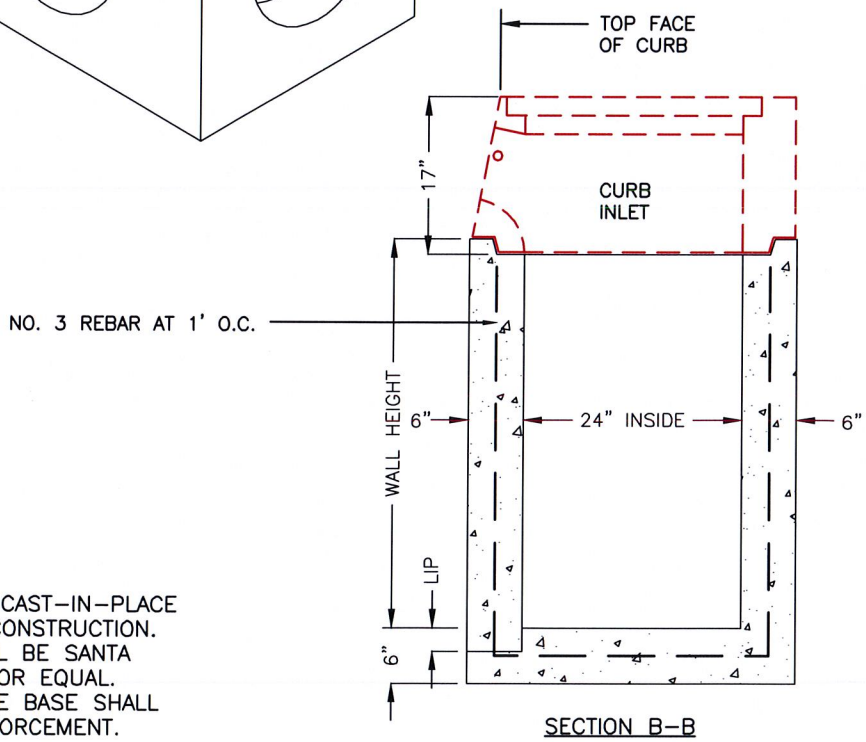

SECTION B-B

NOTES:
1. BASE MAY BE CAST-IN-PLACE OR PRECAST CONSTRUCTION.
2. PRECAST SHALL BE SANTA ROSA B48R4, OR EQUAL.
3. CAST-IN-PLACE BASE SHALL INCLUDE REINFORCEMENT.

City of Winters *PUBLIC WORKS DEPARTMENT*	DATE: DEC 2015
CATCH BASIN BASE	SHEET # 2 OF 3
CITY ENGINEER APPROVED *Nicholas J. Ponticello* P.E. NO. 49584	DRAWING #: 9-12

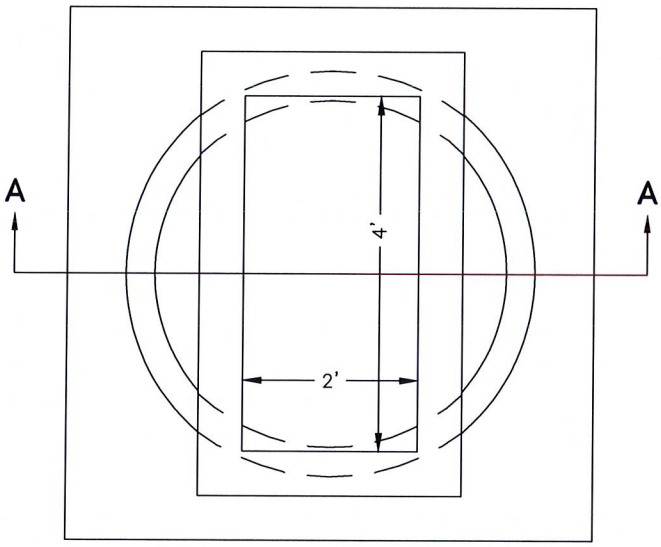

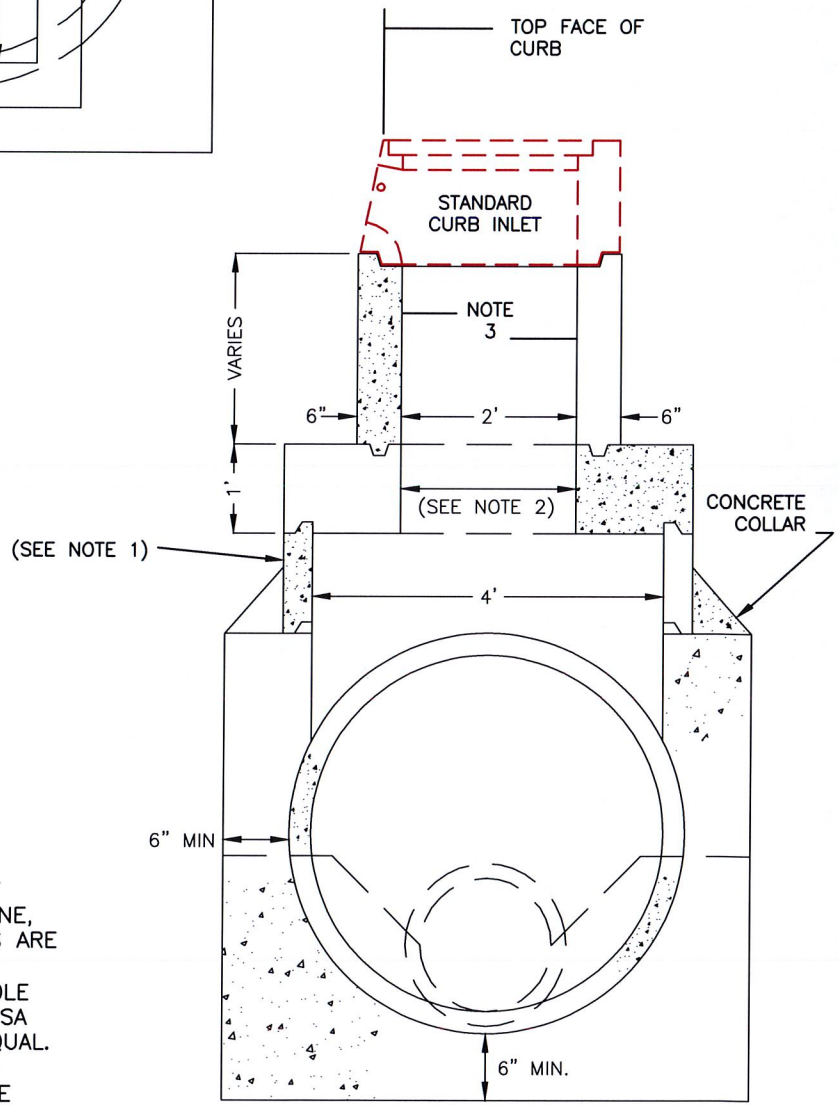

SECTION A–A

NOTES:

1. CAST–IN–PLACE OR PRE–CAST VERTICAL MANHOLE WALL IN ONE, TWO OR THREE FOOT LENGTHS ARE OPTIONAL.
2. PRECAST 48" DIAMETER MANHOLE REDUCER SLAB FOR SANTA ROSA MODEL 4A CURB INLET, OR EQUAL.
3. 24"X48" (INSIDE DIMS.) CATCH BASIN VERTICAL WALL. MAY BE CAST– IN–PLACE OR PRECAST. CAST–IN– PLACE SHALL INCLUDE ENGINEERED REINFORCEMENT.

City of Winters *PUBLIC WORKS DEPARTMENT*	DATE: DEC 2015
CURB INLET MANHOLE	SHEET # 3 OF 3
CITY ENGINEER APPROVED *Nicholas J. Ponticello* P.E. NO. 49584	DRAWING #: 9–12

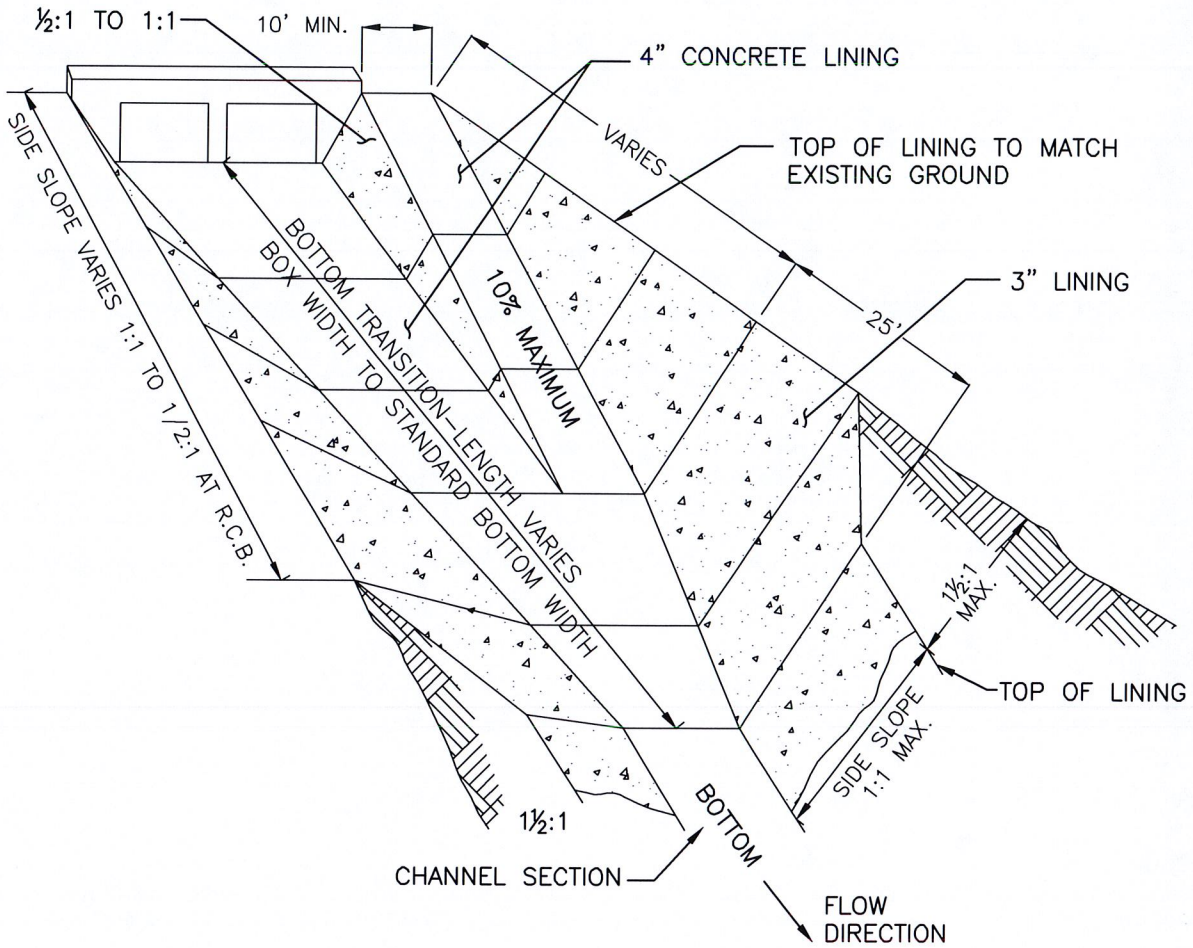

NOTES:

1. BOTTOM TRANSITION 25' MINIMUM LENGTH WITH NO RAMP.
2. WEEP HOLES AND JOINTS AS REQUIRED FOR ALL LINED CHANNEL SECTIONS.
3. LOW SIDE OF CHANNEL TO BE OPPOSITE RAMP.
4. SIDE SLOPE LINING MAY BE DELETED ON CHANNELS WITH BOTTOM LINING ONLY.

City of Winters *PUBLIC WORKS DEPARTMENT*	DATE: DEC 2015
TYPICAL RAMP & TRANSITION DETAIL	SHEET # 1 OF 1
CITY ENGINEER APPROVED Nicholas J. Ponticello P.E. NO. 49584	DRAWING #: 9-18

H=6'-0" MINIMUM
H=2X PIPE DIA. (3' TO 6')

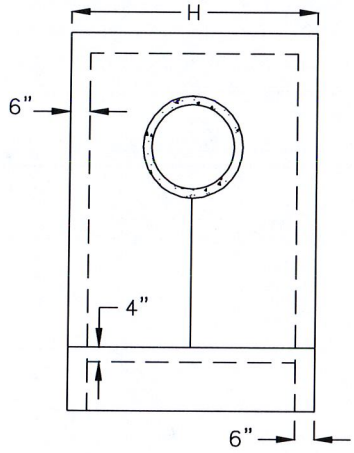

FRONT VIEW

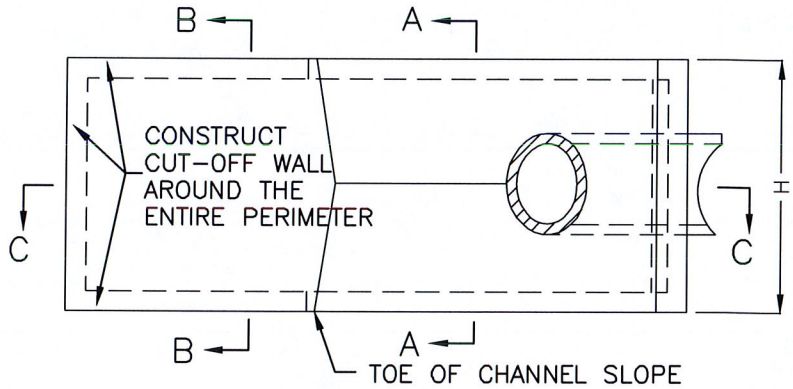

TOP VIEW

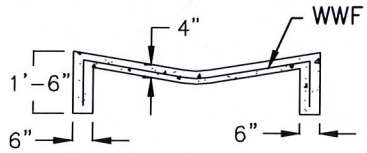

SECTION A-A

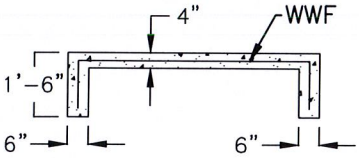

SECTION B-B

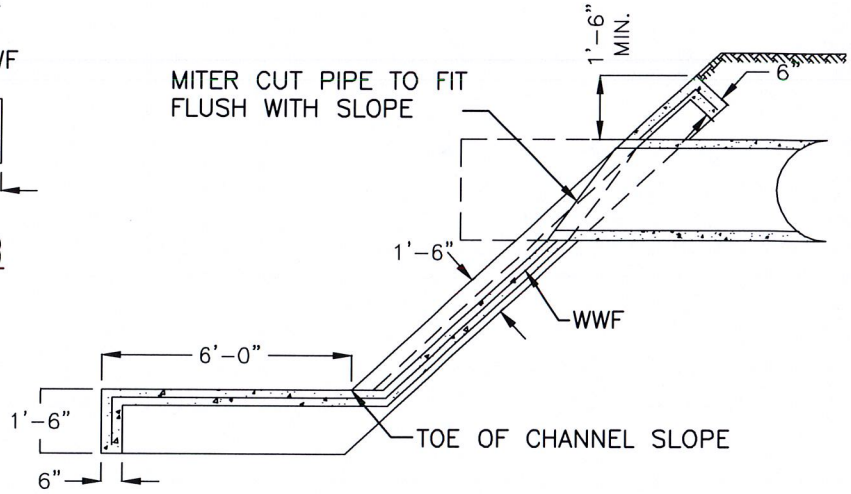

SECTION C-C

NOTES:

1. USE CLASS "B" CONCRETE OR GROUTED COBBLES AS SPECIFIED.
2. 6"X6"-W6XW6 WWF THROUGHOUT CONCRETE SUPPORTED ON WIRE CRADLES @ 24" +/- O.C. BOTH WAYS.

City of Winters *PUBLIC WORKS DEPARTMENT*	DATE: DEC 2015
EROSION CONTROL PIPE DISCHARGE	SHEET # 1 OF 1
CITY ENGINEER APPROVED Nicholas J. Ponticello P.E. NO. 49584	DRAWING #: 9-19

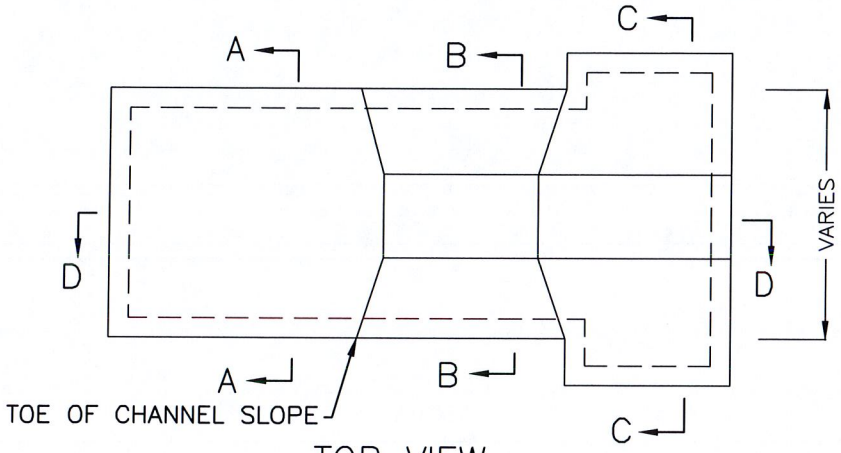

TOP VIEW

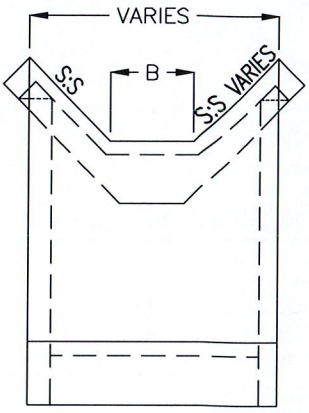

FRONT VIEW

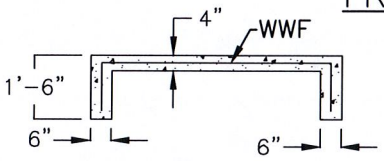

SECTION A-A

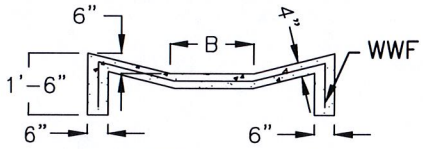

SECTION B-B

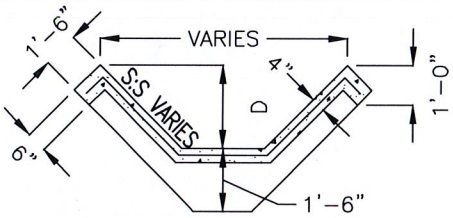

SECTION C-C

NOTES:

1. USE CLASS "B" CONCRETE OR GROUTED COBBLES AS SPECIFIED.
2. 6"X6"-W6XW6 WWF THROUGHOUT CONCRETE SUPPORTED ON WIRE CRADLES @ 24" +/- O.C. BOTH WAYS.
3. ON LINED CHANNELS APRON SHALL CONNECT TO SIDE LINING.
4. B=DITCH BOTTOM WIDTH OR AS SHOWN ON PLANS.
5. D=DITCH WATER DEPTH PLUS ONE FOOT OF FREEBOARD.

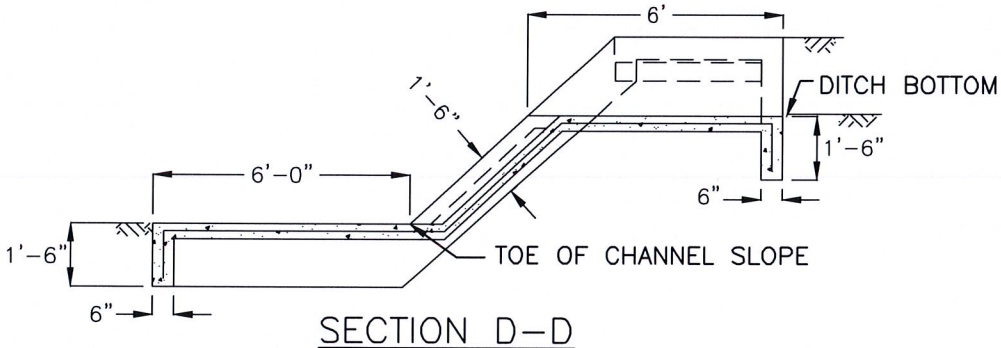

SECTION D-D

City of Winters *PUBLIC WORKS DEPARTMENT*	DATE: DEC 2015
EROSION CONTROL DITCH DISCHARGE	SHEET # 1 OF 1
CITY ENGINEER APPROVED *Nicholas J. Ponticello* P.E. NO. 49584	DRAWING #: 9-20

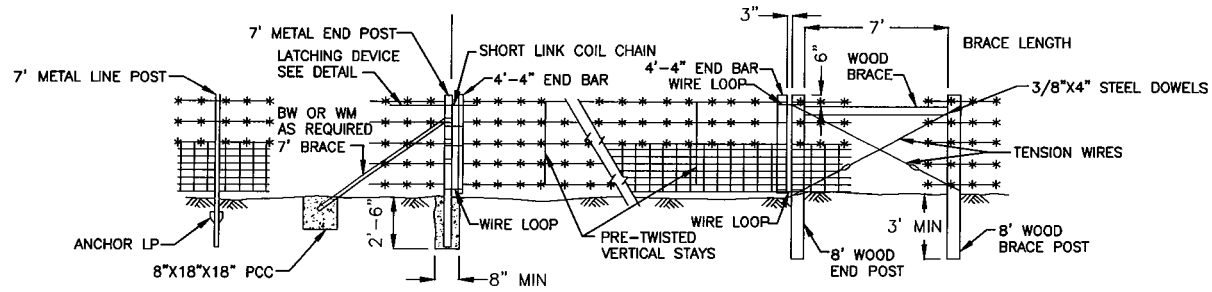

METAL POST INSTALLATION

WOOD POST INSTALLATION

GATEWAY
(SEE NOTE 3)

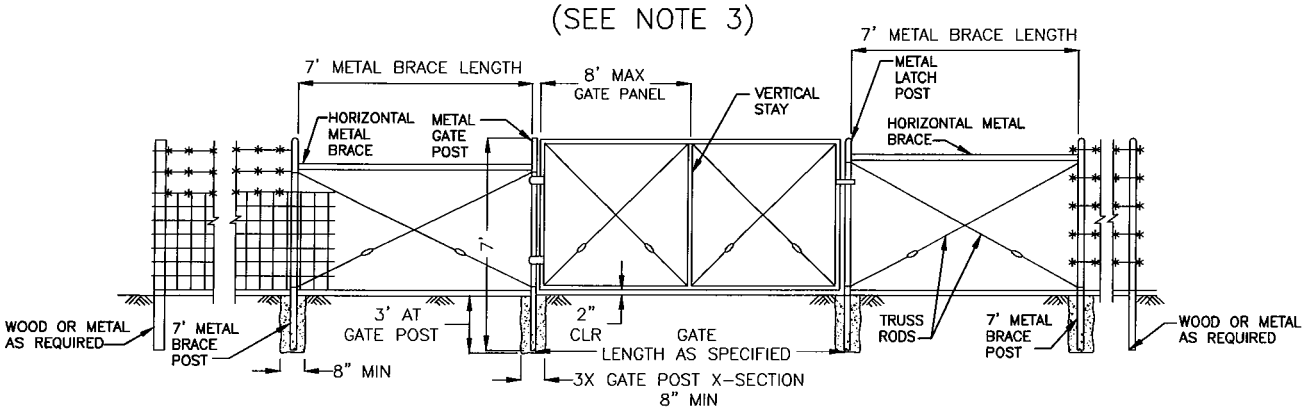

WIRE MESH GATE INSTALLATION
FOR EITHER WOOD OR METAL POST FENCES

NOTE:
ALL METAL PRODUCTS SHALL BE GALVANIZED OR SS AS APPROPRIATE.
ALL WOOD MATERIALS SHALL BE PRESSURE PRESERVATIVE TREATED.

City of Winters *PUBLIC WORKS DEPARTMENT*	DATE: DEC 2015
BARBED WIRE AND WIRE MESH FENCES	SHEET # 1 OF 3
CITY ENGINEER APPROVED Nicholas J. Ponticello P.E. NO. 49584	DRAWING #: 9-21

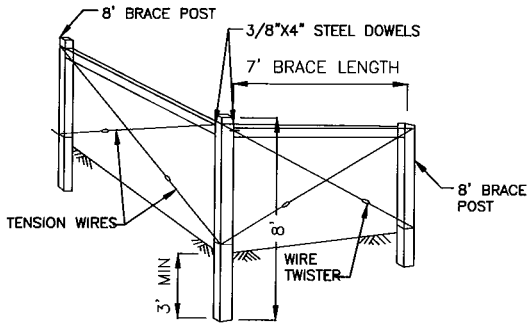

END AND CORNER POST ASSEMBLY

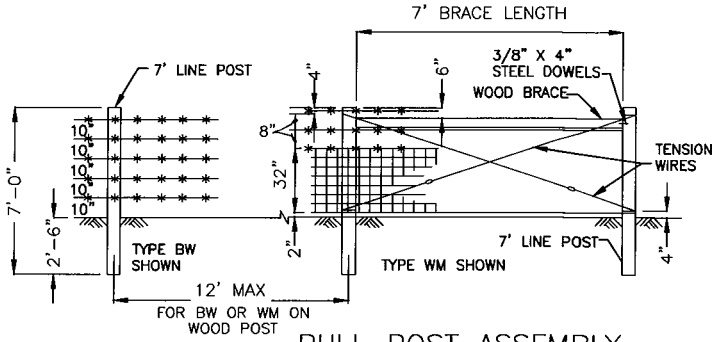

PULL POST ASSEMBLY

AT 660' MAXIMUM INTERVALS FOR WM FENCE.
AT 1320' MAXIMUM INTERVALS FOR BW FENCE.

TYPE BW = 5 LINES OF BARBED WIRE.
TYPE WM = WIRE MESH AND 3 LINES OF BARBED WIRE.

WOOD POST INSTALLATION

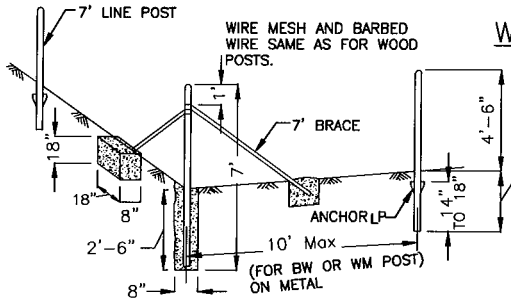

END AND CORNER POST ASSEMBLY

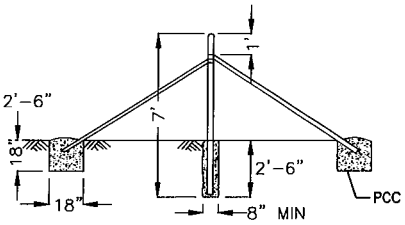

PULL POST ASSEMBLY

AT 660' MAXIMUM INTERVALS FOR WM FENCE.
AT 1320' MAXIMUM INTERVALS FOR BW FENCE.

METAL POST INSTALLATION

City of Winters *PUBLIC WORKS DEPARTMENT*	DATE: DEC 2015
BARBED WIRE AND WIRE MESH FENCES	SHEET # 2 OF 3
CITY ENGINEER APPROVED Nicholas J. Ponticello P.E. NO. 49584	DRAWING #: 9-21

WIRE MESH GATE POST (SEE NOTE 4)		
GATE WIDTHS	NOMINAL OD	WEIGHT PER FT
UP THRU 6'	2-7/8"	5.79
OVER 6' THRU 12'	4"	9.11
OVER 12' THRU 18'	5-9/16"	14.62
OVER 18' TO 24' MAX	6-5/8"	18.97

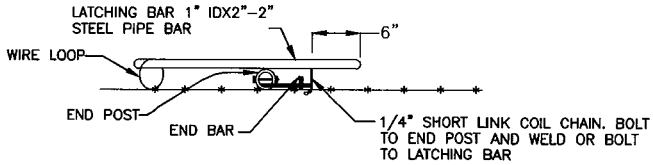

LATCHING DEVICE
FOR GATEWAYS
(SEE NOTE 1)

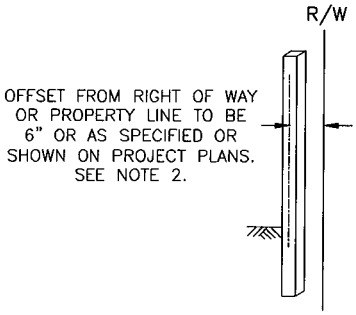

FENCE LOCATION

NOTES:
1. METAL END POST AND END BAR SHOWN. USE WOOD END POST AND END BAR FOR WOOD POST INSTALLATION.
2. OFFSET TO BE 2' AT MONUMENT LOCATIONS, MEASURED AT RIGHT ANGLES TO R/W LINES. TAPER TO ACHIEVE OFFSET TO BE AT LEAST 20' LONG.
3. GATEWAY TO BE USED WHEN SPECIFIED IN THE SPECIAL PROVISIONS.
4. POST DIMENSIONS AND WEIGHTS ARE MINIMUMS. LARGER SIZES MAY BE USED ON APPROVAL OF ENGINEER.
5. LINE POST SPACING FOR WOOD POST EQUALS 12' MAXIMUM. LINE POST SPACING FOR METAL POST EQUALS 10' MAXIMUM.

City of Winters *PUBLIC WORKS DEPARTMENT*	DATE: DEC 2015
BARBED WIRE AND WIRE MESH FENCES	SHEET # 3 OF 3
CITY ENGINEER APPROVED Nicholas J. Ponticello P.E. NO. 49584	DRAWING #: 9-21

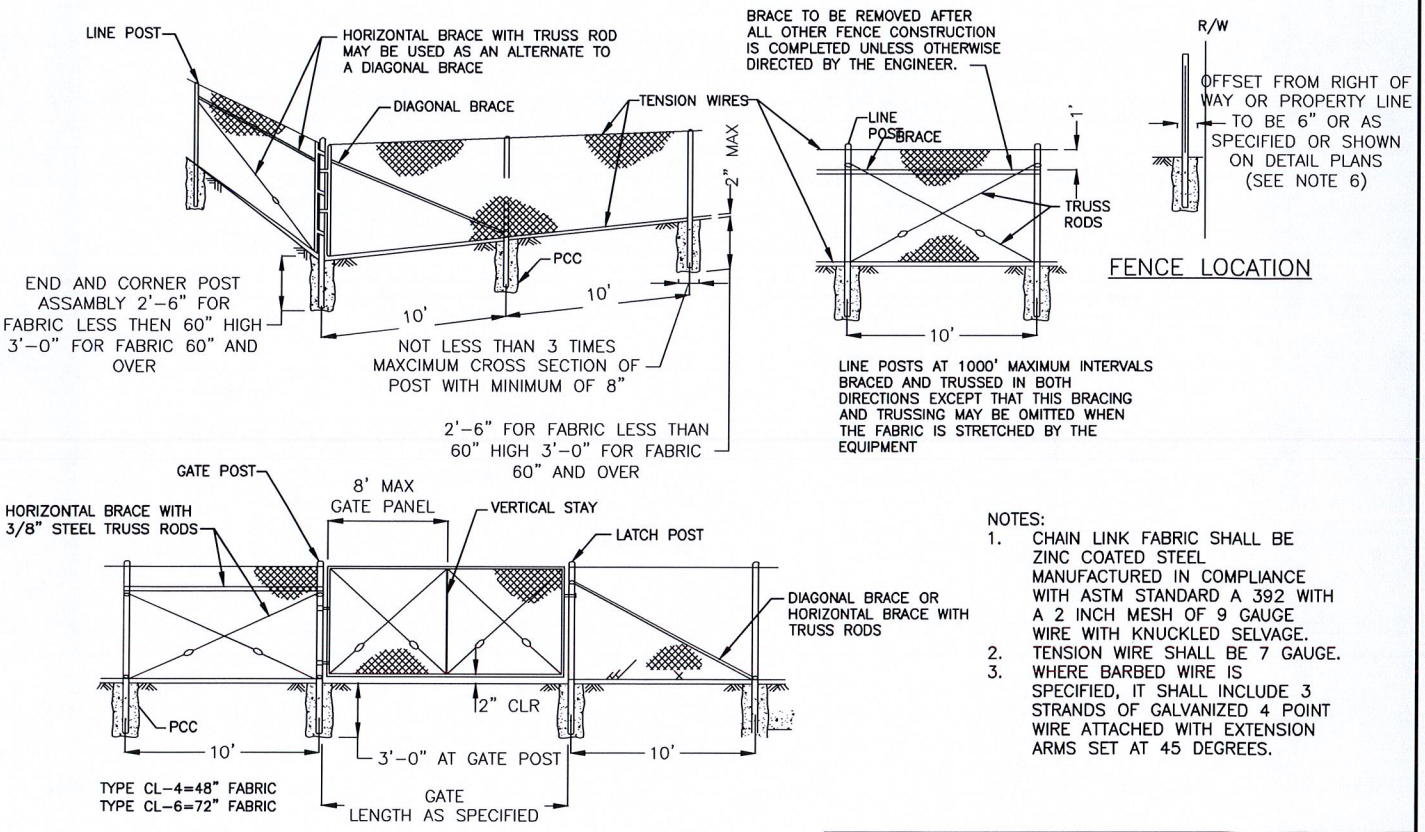

NOTES:

1. CHAIN LINK FABRIC SHALL BE ZINC COATED STEEL MANUFACTURED IN COMPLIANCE WITH ASTM STANDARD A 392 WITH A 2 INCH MESH OF 9 GAUGE WIRE WITH KNUCKLED SELVAGE.
2. TENSION WIRE SHALL BE 7 GAUGE.
3. WHERE BARBED WIRE IS SPECIFIED, IT SHALL INCLUDE 3 STRANDS OF GALVANIZED 4 POINT WIRE ATTACHED WITH EXTENSION ARMS SET AT 45 DEGREES.

City of Winters *PUBLIC WORKS DEPARTMENT*	DATE: DEC 2015
CHAIN LINK FENCE	SHEET # 1 OF 2
CITY ENGINEER APPROVED *Nicholas J. Ponticello* P.E. NO. 49584	DRAWING #: 9-22

TYPICAL MEMBER DIMENSIONS (SEE NOTES)											
FENCE HEIGHT	LINE POSTS			END, LATCH & CORNER POSTS				RAILS & BRACES			
	NOMINAL ROUND O.D. (NOTES 7 & 8)	H	ROLL FORMED	NOMINAL ROUND O.D. (NOTES 7 & 8)	ROLL FORMED			NOMINAL ROUND O.D. (NOTES 7 & 8)	H	ROLL FORMED	
6' & LESS	2-3/8"	1-7/8"X1-5/8"	1-7/8"X1-5/8"	2-7/8"	3-1/2" X 3-1/2"	2" X 1-3/4"		1-5/8"	1-1/2" X 1-5/16"	1-5/8" X 1-1/4"	1-3/4" X 1-1/4"
OVER 6'	2-3/8"	2-1/4" X 2"	2" X 1-3/4"	2-7/8"	3-1/2" X 3-1/2"	2-1/2" X 2-1/2"		1-5/8"	1-1/2" X 1-5/16"	1-5/8" X 1-1/4"	1-3/4" X 1-1/4"

GATE POST (NOTE 7)			
FENCE HEIGHT	GATE WIDTHS	NOMINAL O.D.	WEIGHT PER FOOT
6'-0" AND LESS	UP THRU 6'	2-7/8"	5.79
	OVER 6' THRU 12'	4-1/2"	10.79
	OVER 12' THRU 18'	5-11/16"	14.62
	OVER 18' TO 24' MAX	6-5/8"	18.97
OVER 6'-0"	UP THRU 6'	3-1/2"	7.58
	OVER 6' THRU 12'	5-11/16"	14.62
	OVER 12' THRU 18'	6-5/8"	18.97
	OVER 18' TO 24' MAX	8-5/8"	28.55

ABOVE POST DIMENSIONS AND MASSES ARE MINIMUMS. LONGER SIZES MAY BE USED ON APPROVAL OF THE ENGINEER.

NOTES:

1. THE ABOVE TABLE SHOWS EXAMPLES OF POST AND BRACE SECTIONS WHICH MAY COMPLY WITH THE STANDARD CONSTRUCTION SPECIFICATIONS.
2. SECTIONS SHOWN IN THE TABLES MUST ALSO COMPLY WITH THE STRENGTH REQUIREMENTS AND OTHER PROVISIONS OF THE STANDARD CONSTRUCTION SPECIFICATIONS.
3. OTHER SECTIONS WHICH COMPLY WITH THE STRENGTH REQUIREMENTS AND OTHER PROVISIONS OF THE STANDARD CONSTRUCTION SPECIFICATIONS MAY BE USED ON APPROVAL OF THE ENGINEER.
4. OPTIONS EXERCISED SHALL BE UNIFORM ON ANY ONE PROJECT.
5. DIMENSIONS SHOWN ARE NOMINAL.
6. OFFSET TO BE 2'-0" AT MONUMENT LOCATIONS, MEASURED AT RIGHT ANGLES TO R/W LINES. TAPER TO ACHIEVE OFFSET TO BE AT LEAST 20' LONG.
7. PIPE SECTIONS FOR POSTS, RAILS, BRACES, AND GATES SHALL BE SCHEDULE 40 GALVANIZED PIPE MANUFACTURED IN CONFORMANCE WITH ASTM F 1083.
8. WEIGHT PER FOOT VALUES FOR 1-5/8" O.D. PIPE = 2.27 LBS/FT, 2-3/8" O.D. PIPE = 3.65 LBS/FT, 2-7/8" O.D. PIPE = 5.79 LBS/FT.
9. CHAIN LINK GATE FRAMES SHALL BE A MINIMUM OF 1-7/8" PIPE WEIGHING 2.72 LBS/FT.
10. GALVANIZED GATE HOLDERS OF HEAVY CAST CONSTRUCTION WITH COUNTERBALANCED LATCHES SHALL BE PROVIDED FOR ALL GATES. GATE HOLDERS SHALL BE ANCHORED WITH A MINIMUM 24" LENGTH OF 1-5/8" SCHEDULE 40 PIPE SET IN 8" ø CONCRETE BASE.
11. DOUBLE GATE ASSEMBLIES SHALL ALSO BE FITTED WITH HEAVY DUTY HINGES AND LIFT BAR INTERLOCKING DEVICE WITH DROP ANCHOR AT MIDSPAN THAT LATCHES TO EMBEDDED PIPE.

City of Winters *PUBLIC WORKS DEPARTMENT*	DATE: DEC 2015
CHAIN LINK FENCE	SHEET # 2 OF 2
CITY ENGINEER APPROVED Nicholas J. Ponticello P.E. NO. 49584	DRAWING #: 9-22

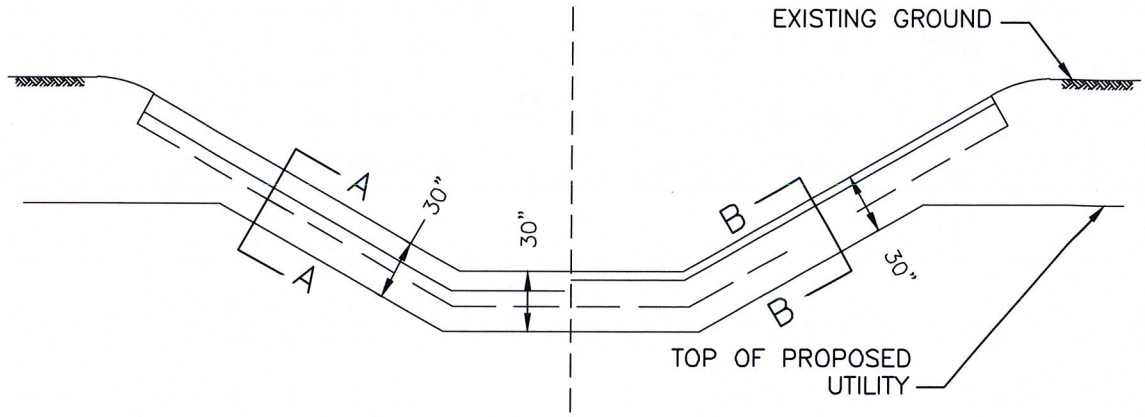

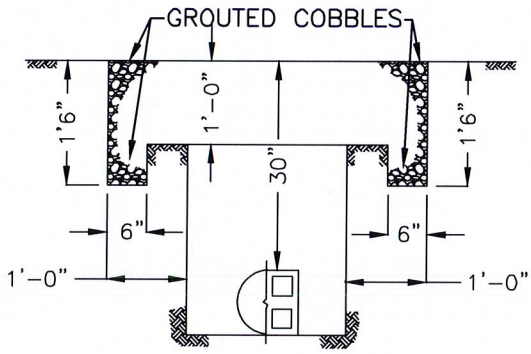

SECTION A–A

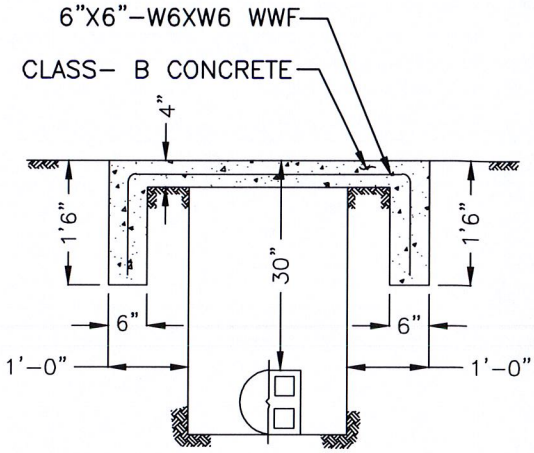

SECTION B–B

NOTES:

1. ALL UTILITY CROSSINGS OF EXISTING STREAMS SHALL BE AT LEAST 30" BELOW EXISTING CHANNEL SIDES AND BOTTOMS. DEEPER PLACEMENT MAY BE REQUIRED IF FUTURE CHANNEL IMPROVEMENTS ARE ANTICIPATED.
2. THE CUT SHALL BE SEALED AS SHOWN WITH GROUTED COBBLES OR CLASS B CONCRETE TO A WIDTH 1' EACH SIDE OF THE UTILITY TRENCH. ALL NATURAL STREAMS, AS SHOWN ON THE NATURAL STREAMS PLAN, SHALL UTILIZE GROUTED COBBLES.

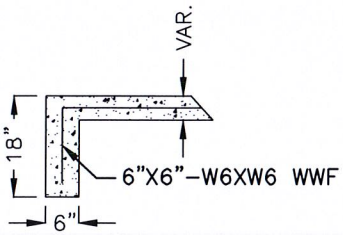

CUTOFF WALL

TO BE PLACED ALONG ENTIRE END OF LINED SECTION AT BEGINNING AND AT END OF LINING

City of Winters *PUBLIC WORKS DEPARTMENT*	DATE: DEC 2015
UTILITY STREAM CROSSING	SHEET # 1 OF 1
CITY ENGINEER APPROVED *Nicholas J. Ponticello* P.E. NO. 49584	DRAWING #: 9–23

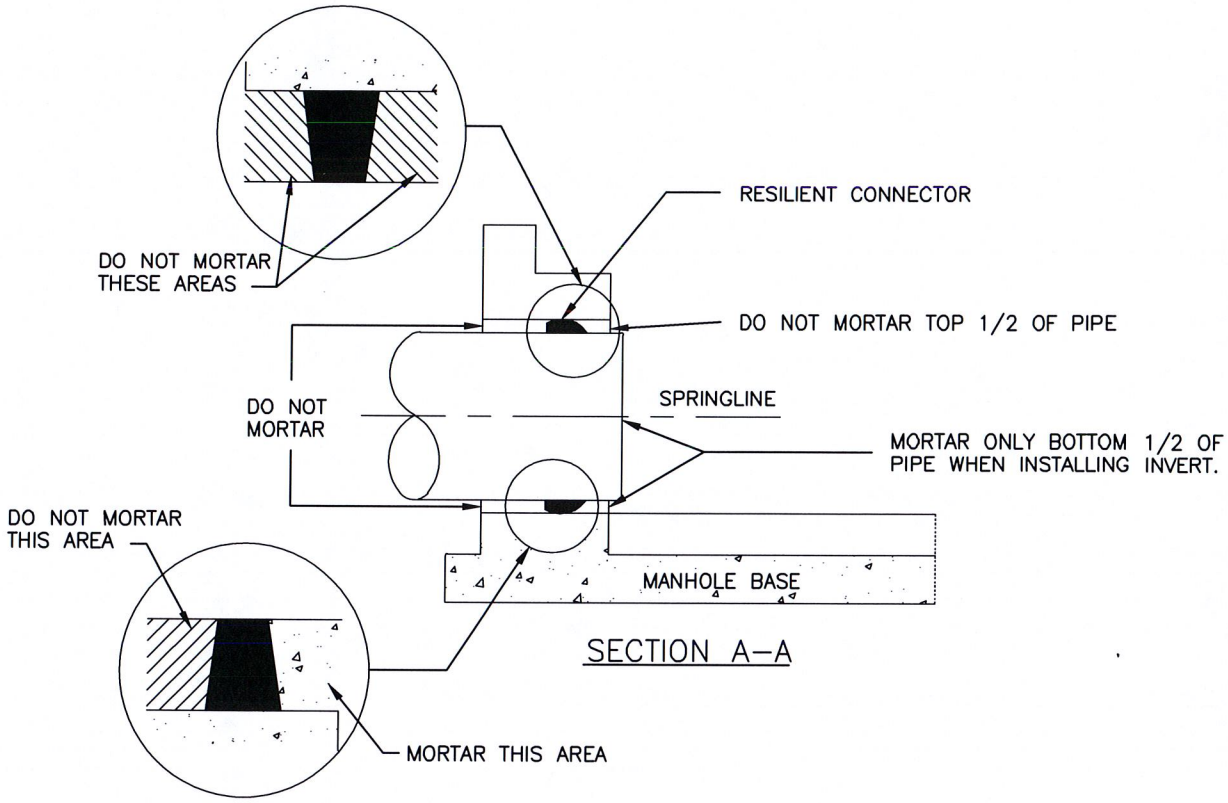

SECTION A–A

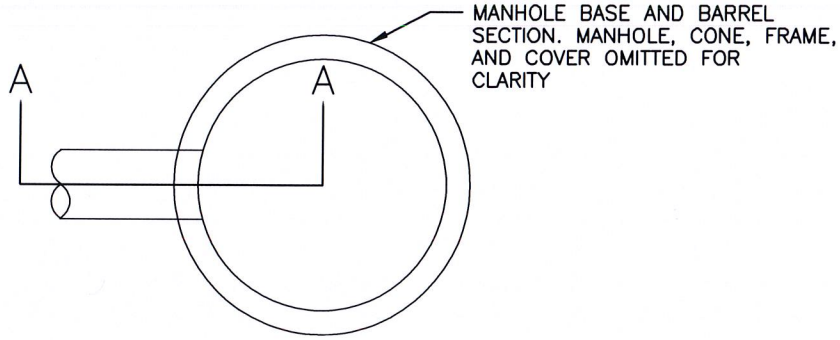

PLAN

NOTES:

1. TO HELP CREATE A FLEXIBLE, WATERTIGHT JOINT. DO NOT PLACE MORTAR AROUND THE CONNECTOR ON THE OUTSIDE OF THE STRUCTURE OR AROUND THE TOP HALF OF THE CONNECTOR ON THE INSIDE WHEN COMPLETING THE INVERT WORK.
2. RESILIENT CONNECTORS SHALL BE A–LOK, PRESS–SEAL, OR APPROVED EQUAL.
3. ALL CONNECTORS SHALL MEET OR EXCEED THE REQUIREMENTS OF A.S.T.M. C–923

City of Winters *PUBLIC WORKS DEPARTMENT*	DATE: DEC 2015
FLEXIBLE CONNECTOR PIPE TO MANHOLE DETAIL	SHEET # 1 OF 1
CITY ENGINEER APPROVED Nicholas J. Ponticello P.E. NO. 49584	DRAWING #: 9–24

SECTION 10

GRADING REQUIREMENTS

10-1 GENERAL REQUIREMENTS

Grading shall conform to Winters Municipal Code except as modified by these Improvement Standards.

10-2 PLAN SHEET DETAILS

In addition to the requirements of Section 3, the following items shall be included on grading plans:

A. Slope symbols for 3:1 slopes or steeper, where grade difference exceeds one foot.

B. Ridge and/or valley delineation.

C. Typical lot grading details.

D. Proposed spot and/or pad elevations.

E. Flow directional arrows (off-site, around perimeter of development when adjacent to developed areas) and perimeter elevations at the property line.

F. Existing spot elevations and/or contour lines on-site and off-site around perimeter of development. Where the existing terrain is not relatively flat, contour lines shall be mandatory. The spot elevations or contour lines shall be extended off-site for a minimum distance of 50 feet (flat terrain; 100 feet minimum) when adjacent to undeveloped areas.

G. Existing vegetation including trees (variety, size and elevation at base of all trees nine inches or larger).

H. Retaining wall details (symbols, construction details, limits, and top and bottom of wall elevations).

I. Back of sidewalk or curb elevations.

J. Location and grate elevation of storm drain inlets

K. Typical sections across side yard property lines where the difference in finish pad elevations exceeds two feet. Delineated on the section shall be the side yard drainage swale and minimum distance between the proposed building and the side yard property line.

L. Names of adjacent subdivisions.

M. Off-site intersecting property lines.

N. Signature block for certification of pad elevations by Consulting Engineer for subdivision projects.

O. For all projects requiring import or export:

1. Location and plan of borrow (cut) area or spoils (fill) disposal area
2. Cut or fill slopes as recommended by a Geotechnical Investigation Report, or:
   a. Cut Slopes of 2:1 or flatter
   b. Fill slopes of 3:1 or flatter
3. Finish fill heights of 3 feet or less; unless approved otherwise by City Engineer.

4. No cuts within 3 feet or fills within 5 feet of property lines.
5. Cut and fill areas shall not block or alter drainage patterns.
6. All offsite cut and fill areas shall be permanently protected from erosion.

P. Erosion control details as required in Section 11.

Q. Overland release grades and details

10-3 ROLLING TERRAIN GRADING

Grading or rolling terrain shall be accomplished in a manner whereby the profile of the rolling terrain is maintained as close to that which exists as practically possible. Interior cuts and fills shall be no greater than 5 feet unless approved by the Director.

10-4 BOUNDARY GRADING

Special attention shall be given to grading adjacent to the exterior perimeter property line of a development. All adverse effects to off-site properties adjacent to new developments shall be reduced to an absolute minimum. Fills and cuts adjacent to the exterior perimeter property line shall be designed in accordance with the following:

A. Fills

Fills in excess of 2 feet shall not be allowed unless indicated on planning approval documents and permitted by project conditions of approval. When fills are unavoidable, they shall conform to Standard Drawing 10-1. If possible, fill slopes shall be constructed off-site, with the property line being situated at the top of the fill. A right of entry shall be required for all off-site fills prior to plan approval. A note shall be placed on the plans listing the name of the grantor of the right of entry and the date obtained. Suggested rights of entry forms are available from the Public Works Department.

B. Cuts

Cuts shall be constructed in accordance with Standard Drawing 10-2, except that the slope setback from the property line to the slope hinge point shall be a minimum of 2 feet for all slopes steeper than 5:1.

C. Fences

When fences are required, they shall be placed within one foot of the property line. The height of a fence shall be measured from the highest ground adjacent to the fence, regardless of the side that is developing.

10-5 INTERIOR GRADING

Grading at interior property lines shall conform to Standard Drawing 10-2 and the following:

A. Property Lines

Property lines shall be situated at the top of fill and cut slopes. Grading shall be such that surface runoff will not be allowed to sheet flow down slopes that are steeper than 5:1. Property lines shall be situated at the tops of retaining walls with a minimum setback of 1.0 foot from the property line to the retaining wall.

B. Slopes

The maximum earth slopes shall be no steeper than 2 (Horizontal) to 1 (Vertical), unless flatter slopes are recommended by a Geotechnical Engineering Investigation. The minimum earth slope

shall be at least 1%. Minimum asphalt concrete surface slopes shall be 1% and minimum portland cement concrete slopes shall be 0.25%.

C. Cross Lot Surface Flow

Grading of any residential single family or duplex lots shall be such that surface flow shall not be allowed to flow across an adjacent lot. The drainage for each such lot shall be designed to flow to the public right of way or other publicly maintained drainage facility.

D. Street Sag Locations

Lots on the low side of streets and at sag points shall be graded in such a manner as to preclude flooding of the building pad area in the event of malfunction or overloading of the street drainage system. All building pad grades shall be a minimum of 1 foot above the overland release elevation.

E. Commercial

Commercial developments shall not be allowed to "sheet drain" more than twenty-five feet of site frontage to a public street. Areas more than 25 feet from the street shall be graded to drain into an on-site drainage system.

10-6 RETAINING WALLS

Retaining walls shall comply with the following:

A. Wood Retaining Walls

All wood retaining walls shall be designed for a minimum life of 20 years using wood that is preservative treated. Retaining walls for interior property lines shall be designed by a licensed Civil or Structural Engineer. Redwood is not an acceptable material in lieu of preservative treated wood.

B. Reinforced Masonry Block or Concrete retaining walls

Masonry or Concrete retaining walls for boundary or phase lines shall conform to various Standard Plans published by Caltrans or APWA, So. California Chapter. Otherwise, retaining walls for interior property lines shall be designed by a licensed Civil or Structural Engineer. All retaining walls adjacent to or along the public right of way shall be masonry or concrete.

Manufactured, modular, inter-locking, pre-cast concrete or masonry retaining walls may be substituted for reinforced cast in place concrete or masonry block construction. Design calculations and manufacturer's cut sheets and construction details shall be provided for review and approval prior to any such substitution.

C. **Building Permit Requirement**

A building permit shall be obtained for all retaining walls exceeding 4 feet in height (finished ground at base of wall to finished ground at top of wall) or when a fence greater than 6 feet high is an integral part of the wall.

D. **Grading Requirements**

Grading shall be such that on-site-runoff will not flow over retaining walls. Suitable concrete ditches or other drainage collection devices shall be provided along the tops of retaining walls if the adjacent ground slopes to the top of the wall. Surface drainage water shall not be collected using any required sub-surface ground water collection system behind the wall.

Where pads on adjacent lots are 10 feet apart or less and the difference in elevation exceeds 1.5 feet, a retaining wall will be required.

10-7 GRADING AT TREES

A. All trees with a 6-inch diameter trunk or larger, measured 4-1/2 feet above the ground, in healthy condition, shall be identified on the plans as to size and species. Every reasonable effort shall be made to avoid removing trees or creating conditions adverse to the tree's health.

B. Grading within the drip line of trees to remain, especially oak trees, shall not be allowed. IN the event that grading is required to provide essential subdivision improvements, then the services of a Certified Arborist shall be retained to investigate and recommend appropriate measures to maximize the tree's potential for continued good health.

C. Trees with a 6-inch or larger trunk diameter that are questionable as to health or safety shall be reviewed by a Certified Arborist and appropriate actions recommended.

D. Cross sections or other detailed design and topographic information may be required where trees are located adjacent to roadways, new slopes or critical areas. This information will be used to determine the appropriateness of recommended improvements to maximize the tree's potential for continued good health.

E. The following development control measures shall be placed as notes and incorporated into the designs of projects that have oak trees to be saved:

1. Only those oak trees marked with an "X" are to be removed during construction.
2. During construction, there shall be no grading, trenching, earth removal or addition, building pad formation or earth alteration of any kind within the drip line of any oak or other tree to be saved.
3. Prior to the construction phase of the project, a physical barricade shall be erected and maintained coincidental to the drip lines of all oak or other trees to be saved. Within this barrier no construction related activities shall be allowed including, but not limited to, vehicular parking or material storage. The physical barricade shall be T-bars and 4-foot high wire mesh fencing, or orange fabric mesh.
4. No trenching shall be allowed within the drip lines of oak or other trees to be saved. If it is absolutely necessary to install underground utilities within the drip lines of an oak or other tree, then boring or drilling methods shall be used.
5. Paving within the drip lines of oak or other trees shall be minimized. When it is absolutely necessary, porous paving material such as turf-stone, interlocking pavers, or others material specifically approved by the Director shall be used and no paving shall occur within 5 feet of their trunks. When asphalt or concrete paving is installed, piped aeration systems can be used, as an alternate to porous paving material, only when the paving material is installed within 6 inches from the original ground elevation. The piped aeration systems shall not be installed any deeper than 1 foot from the original ground elevation. The Certified Arborist shall approve the piped aeration system prior to construction. No aeration systems shall be constructed within the City right of way.

10-8 CERTIFYING PAD ELEVATIONS

Upon completion of the grading and prior to acceptance of the subdivision improvements by the City, the Consulting Engineer shall verify the final pad elevations. The elevations shall be verified at the center and the comer of each pad. Elevation deviations of more than 0.20 feet shall be noted on the plans.

A signature block, certifying that final graded elevations in the field are the same as those shown on the plans, shall be included on the subdivision grading plans. The Consulting Engineer shall sign the signature block, certifying to the above, and provide one set of mylar or polyester film original record (as-built) grading plans to the Director.

10-9 MAINTENANCE OF ACCESS TO UTILITY FACILITIES

Continuous, suitable access shall be maintained during all stages of construction of any facility owned or operated by the City or a utility providing essential services, such as, but not limited to, sanitary sewer, water, drainage, electricity, gas, telephone/communications, etc.

BLANK PAGE

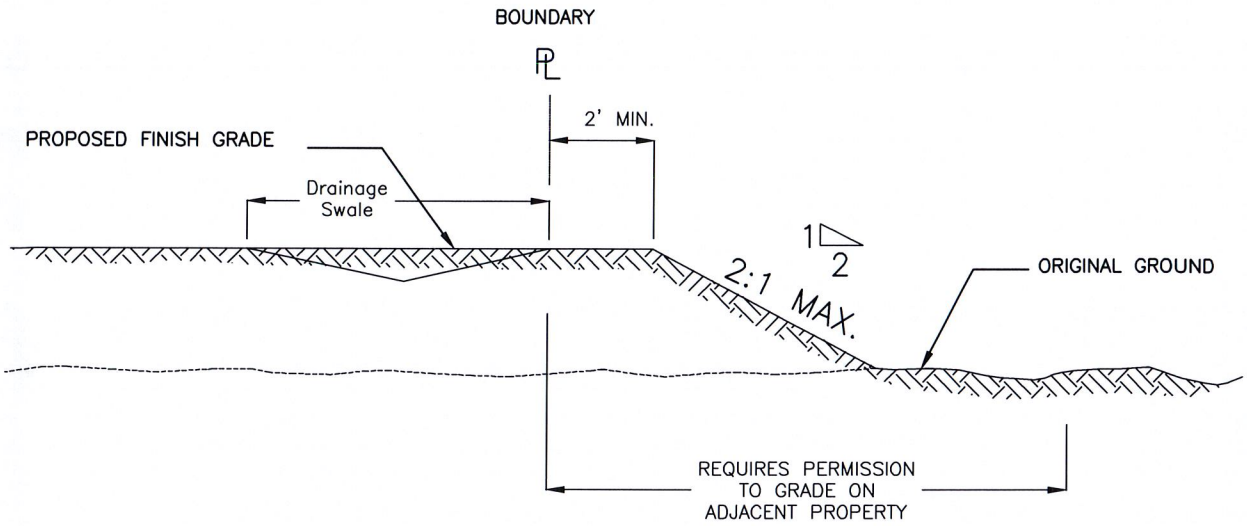

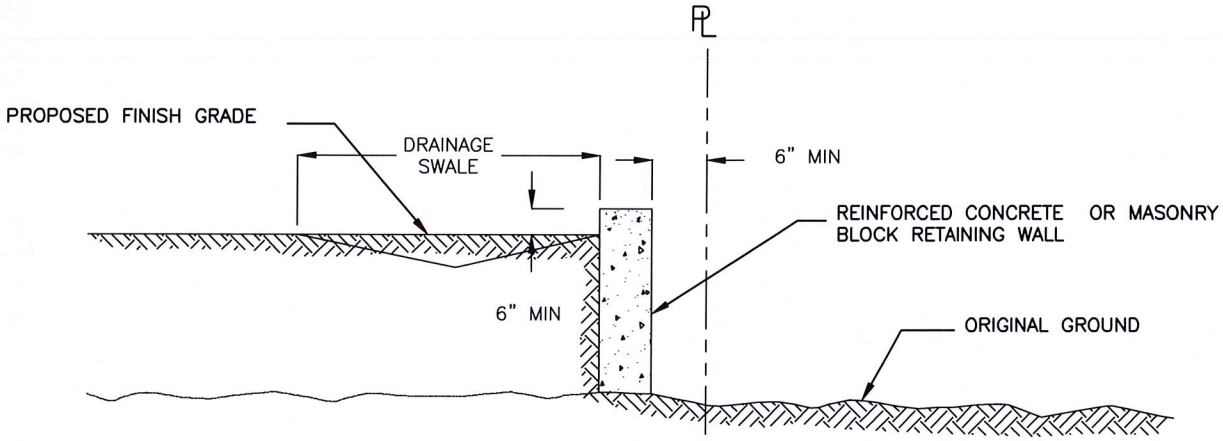

City of Winters *PUBLIC WORKS DEPARTMENT*	DATE: DEC 2015
EXTERIOR PERIMETER PROPERTY LINE GRADING FOR FILL AREAS	SHEET # 1 OF 1
CITY ENGINEER APPROVED Nicholas J. Ponticello P.E. NO. 49584	DRAWING #: 10-1

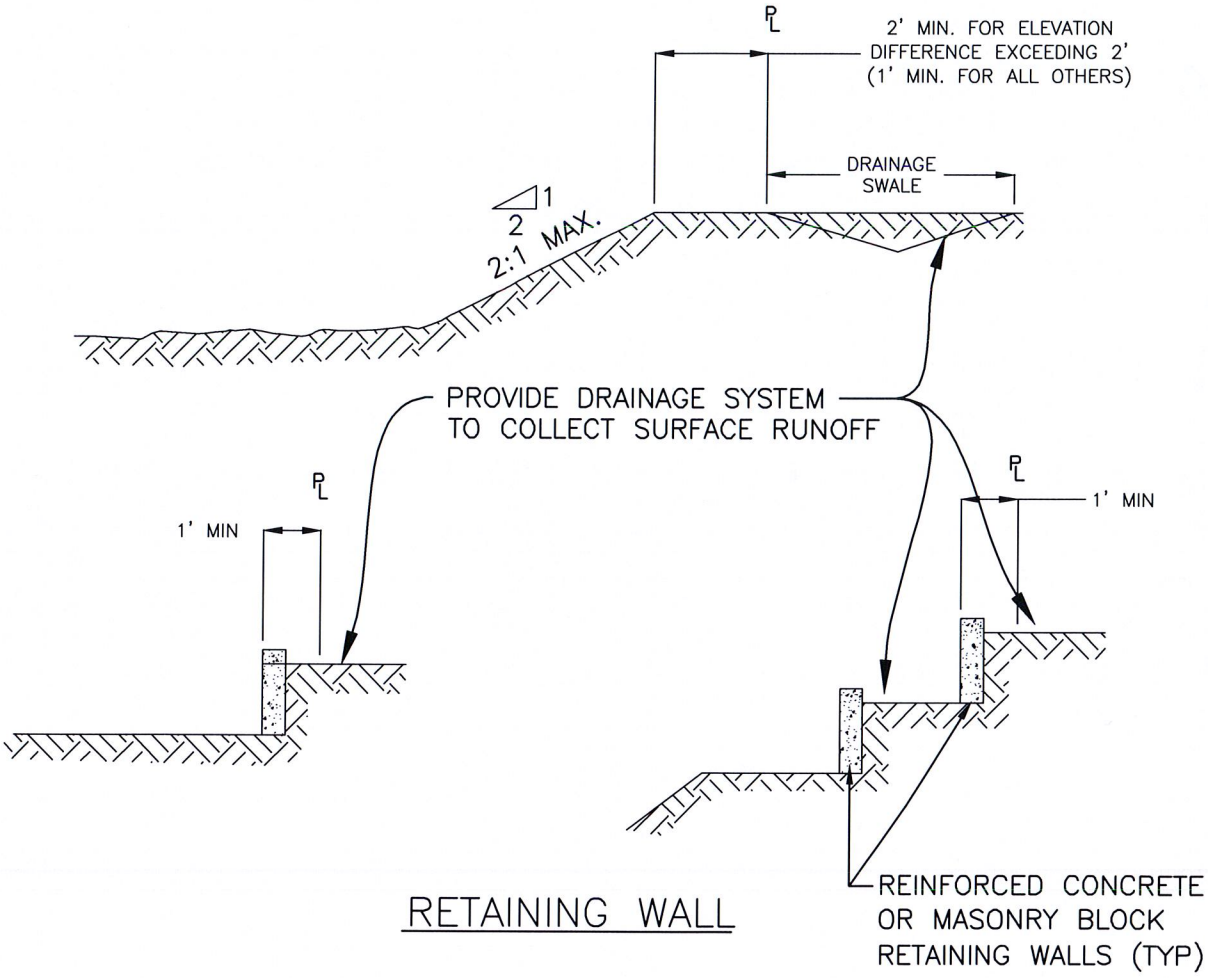

RETAINING WALL

NOTE: NO DOUBLE RETAINING WALLS SHALL BE CONSTRUCTED ON SIDE YARDS

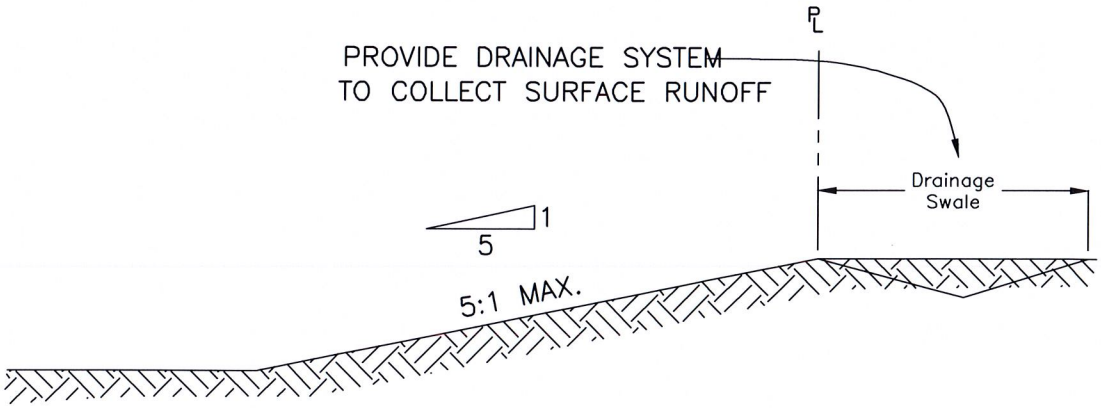

City of Winters *PUBLIC WORKS DEPARTMENT*	DATE: DEC 2015
GRADING FOR INTERIOR PROPERTY LINES AND PERIMETER PROPERTY LINES IN CUT AREAS	SHEET # 1 OF 1
CITY ENGINEER APPROVED Nicholas J. Ponticello P.E. NO. 49584	DRAWING #: 10-2

SECTION 11

EROSION AND SEDIMENT CONTROL

11-1 DEFINITIONS

A. BMP - Best Management Practice.

B. NPDES – National Pollutant Discharge Elimination System

C. SWRCB – State Water Resource Control Board

D. GP – General Permit under SWRCB Order No. 2009-0009-DWQ amended by Order No. 2010-014-DWQ

E. CP – Construction Permit

F. SWPPP – Storm Water Pollution Prevention Plan

11-2 CONSTRUCTION PERMIT FOR STORM WATER RUNOFF

The SWRCB, through the GP, requires that

1. any all construction or demolition activity, including, but not limited to, clearing, grading, grubbing, or excavation, or any other activity that results in a land disturbance of equal or greater than one acre.
2. construction activity that results in land surface disturbances of less than one acre if the construction activity is part of a larger common plan of development or the sale of one or more acres of disturbed land surface.
3. construction activity related to residential, commercial, or industrial development on lands currently used for agriculture including, but not limited to, the construction of buildings related to agriculture that are considered industrial pursuant to U.S. EPA regulations, such as dairy barns or food processing facilities.

A developer that meets the above criteria, or any criteria sited in the GP, must electronically file all PRDs, NOTs, changes of information, annual reporting, and other compliance documents required by the GP through the SWCRB's water Multi-Application and Report Tracking System (SMARTS) website.

Regardless of a developer's requirement to under the GP, all developments must comply with BMPs for storm water runoff during and post-construction.

11-3 EROSION AND SEDIMENT CONTROL PLAN

Improvement Plans shall include an Erosion and Sediment Control Plan, which shall be prepared and approved in accordance with these requirements.

For projects over one acre, a Notice Of Intent (NOI) must be filed to obtain coverage under the GP, which must be done prior to construction. As a condition of the GP, a SWPPP must also be developed for the project. A copy of the SWPPP shall be provided to the Department prior to approval of the Plans.

Erosion and Sediment Control Plans shall include erosion controls and sediment controls from the California Stormwater BMP Handbook (BMP Handbook), Section 3. These BMPs may be referenced or incorporated into the Grading Plans or on separate sheets for clarity.

11-4 REQUIRED BMPS

Sediment Control features from Section 3.2 of the BMP Handbook shall be required on all drain inlets as appropriate for the application, including but not limited to SE-6, SE-9 and SE-10. All edges of construction site fronting roadway or drainage channels shall include Fiber Rolls (SE-5) and/or Silt Fences (SE-1) as applicable. Each construction site shall provide designated concrete, paint and waste disposal locations as necessary. Concrete stamps shall be placed at all new storm drain inlets (Section 11-5). All other BMPs features shall be incorporated as the site, slope and other conditions require.

11-5 CONCRETE STAMP

A. Definition - A message stamped into the concrete or cast into any cast iron frame work at each storm drain drop inlet to alert citizens not to dump into the storm drainage system.

B. Applicability - Concrete stamps shall be applied at all new or reconstructed storm drain inlets.

C. Design - All stamps shall be approved by the Director before being used.

D. Installation shall be per Drawing 11-1.

11-6 CLEAN UP

All temporary erosion and sediment control measures shall be cleaned up and removed by the Contractor upon completion of all improvements and after establishment of all permanent erosion and sediment control measures and/or permanent landscaping. As portion of the temporary erosion and sediment control measures are no longer needed, they shall be cleaned up and removed from the project site. Any organic matter, such as partially decomposed straw bales, may be spread as mulch in landscaped areas at the discretion of the property owner. Any non-organic matter shall be removed from the project site and disposed of at a landfill or other recycling facility or hazardous material disposal center, as appropriate.

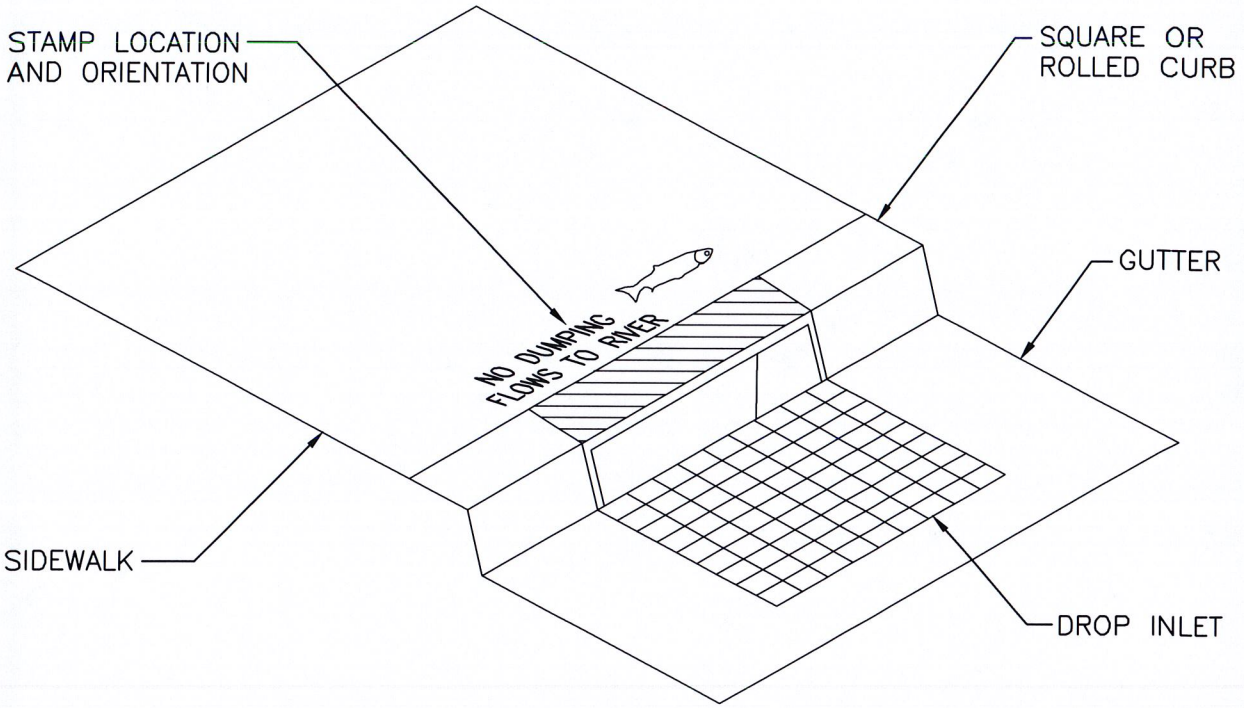

NOTES

1. MESSAGE AND SYMBOL SHALL BE AS SHOWN ON SHEET 2 OR AS APPROVED BY THE DIRECTOR.
2. LETTERS SHALL BE 1.5 INCHES (38MM) IN HEIGHT. THE MESSAGE SHALL BE CENTERED ON THE BACK OF THE INLET.
3. CONCRETE SHALL BE STAMPED IN SUCH A WAY AS TO PROVIDE FOR A CLEAR AND LEGIBLE IMAGE. (APPROXIMATE DEPTH OF .25 INCH OR 6MM.)
4. ALL STAMPS SHALL BE APPROVED BY THE DIRECTOR BEFORE BEING USED.
5. STAMP MAY BE PERMANENTLY CAST INTO CAST IRON FRAME OR PRE-CAST CONCRETE PORTIONS OF INLET.

City of Winters *PUBLIC WORKS DEPARTMENT*	DATE: DEC 2015
STORMWATER QUALITY DROP INLET CONCRETE STAMP	SHEET # 1 OF 2
CITY ENGINEER APPROVED *Nicholas J. Ponticello* P.E. NO. 49584	DRAWING #: 11-1

STAMP MESSAGES AND SYMBOLS

DIMENSIONS MAY VARY AMONG THE STAMP DESIGNS SHOWN BELOW, BUT SHALL NOT EXCEED THE MAXIMUM DIMENSIONS.

30 INCHES MAXIMUM
(762MM)

12 INCHES MAX.
(305MM)

NO DUMPING!
FLOWS TO CREEK

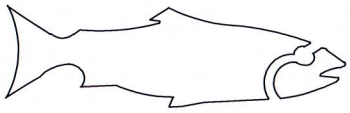

NO DUMPING

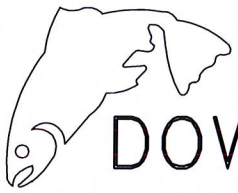

I LIVE DOWNSTREAM

NO DUMPING!
FLOWS TO RIVER

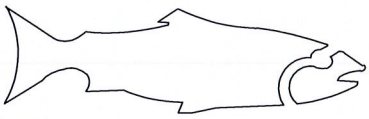

City of Winters *PUBLIC WORKS DEPARTMENT*	DATE: DEC 2015
STORMWATER QUALITY DROP INLET CONCRETE STAMP	SHEET # 2 OF 2
CITY ENGINEER APPROVED *Nicholas J. Ponticello* P.E. NO. 49584	DRAWING #: 11-1

SECTION 12

SUBDIVISION SURVEY MONUMENTS

12-1 SURVEY MONUMENT REQUIREMENTS:

The Consulting Civil Engineer, or Licensed Land Surveyor, preparing the project mapping, shall place survey monuments at the following locations within subdivision improvements:

1. At the intersections of all street centerlines.
2. At the beginning and end of all curves on the street centerlines or at the point of intersection of horizontal curves if the point is within the street pavement.
3. At all subdivision boundary comers and such other locations designated by the Director so as to enable any lot or portion of the improvement to be retraced or located.
4. Monuments shall be placed at intermediate points on street centerline if sight lines between monuments can be potentially obstructed by landscaping or improvements on private property.
5. A cut cross (+) may be set in the sidewalk concrete at the extension of each lot line provided that the offset is a standard distance and is noted on the recorded map.

The monuments shall comply with the following:

1. Subdivision boundary monuments, except those in street pavement, shall not be less than 1¼ inch galvanized iron pipe, 30 inches in length, capped and tagged.
2. Subdivision boundary monuments in street pavement shall be a street monument complying with Drawing 4-26.
3. All other centerline and street intersection monuments shall be a street monument complying with Drawing 4-26.

Survey monuments shall also be placed by the consulting Engineer, or by a Licensed Land Surveyor, at the following locations within the improvement, and off-site, due to deed dependency, as required by the Agency:

1. Section comers
2. Quarter comers
3. Centers of sections.

The section comer, quarter comer, and centers of sections monuments shall be Class "B" concrete, poured in place, with minimum dimensions of 8 inches by 8 inches by 24 inches deep. Ferrous material shall be placed in the monument to make it locatable with a. magnetic locator. A metal survey disc shall be installed by the Consulting Engineer before the concrete has acquired its initial set and shall be firmly embedded in the concrete.

As an alternate monument, a 2" galvanized iron pipe, not less than 24 " in length shall be placed in paved areas, and 48" in length in unpaved areas. If the 2" galvanized iron pipe alternate is used, the metal disc shall be embedded in epoxy or concrete poured in the pipe.

Survey monument boxes shall be provided and placed by the Consulting Engineer at all quarter corners and section corners located within ultimate rights-of-way. Survey monument boxes shall be street monuments complying with Drawing 4-26.

The Consulting Engineer shall show the location and character of all survey monuments within the construction area and place a note on all construction plans stating that the Contractor is responsible for the protection of all existing monuments and other survey markers in accordance with section 8771 of the Land Surveyor's Act.